ELECTRICAL WIRING SCHEMATIC

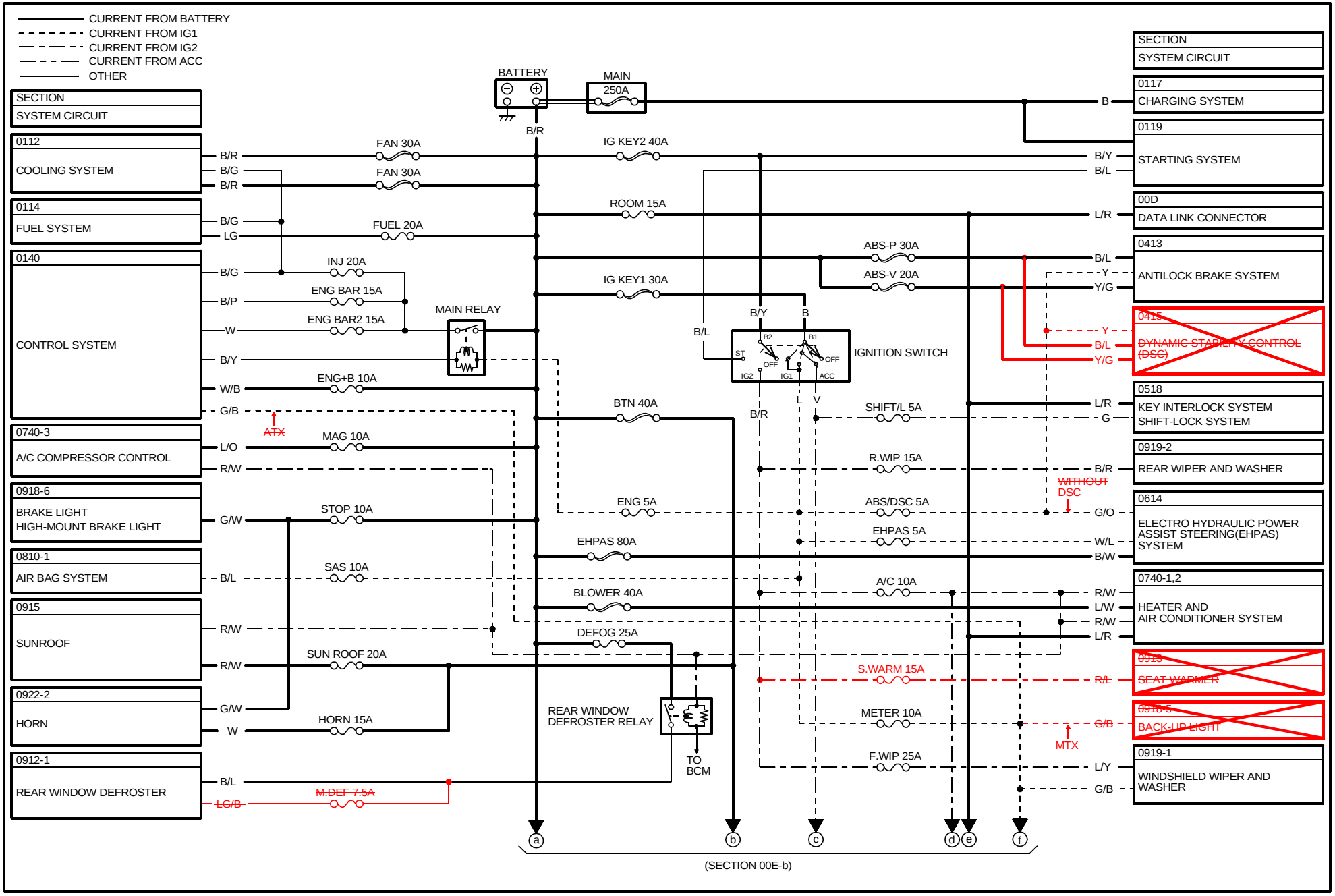

cardiagn.com

ELECTRICAL WIRING SCHEMATIC

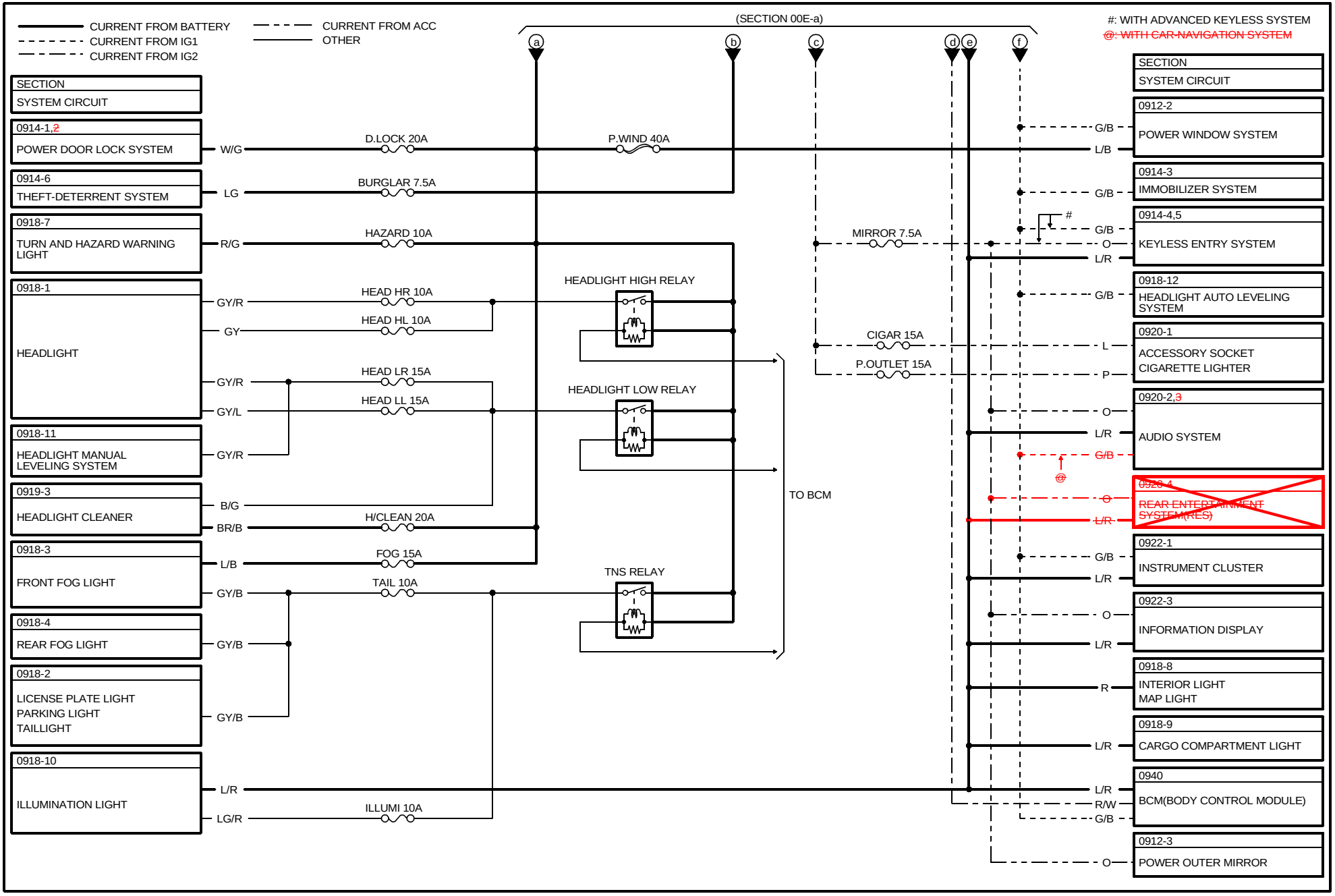

00E-b

cardiagn.com

F-01 MAIN FUSE BLOCK

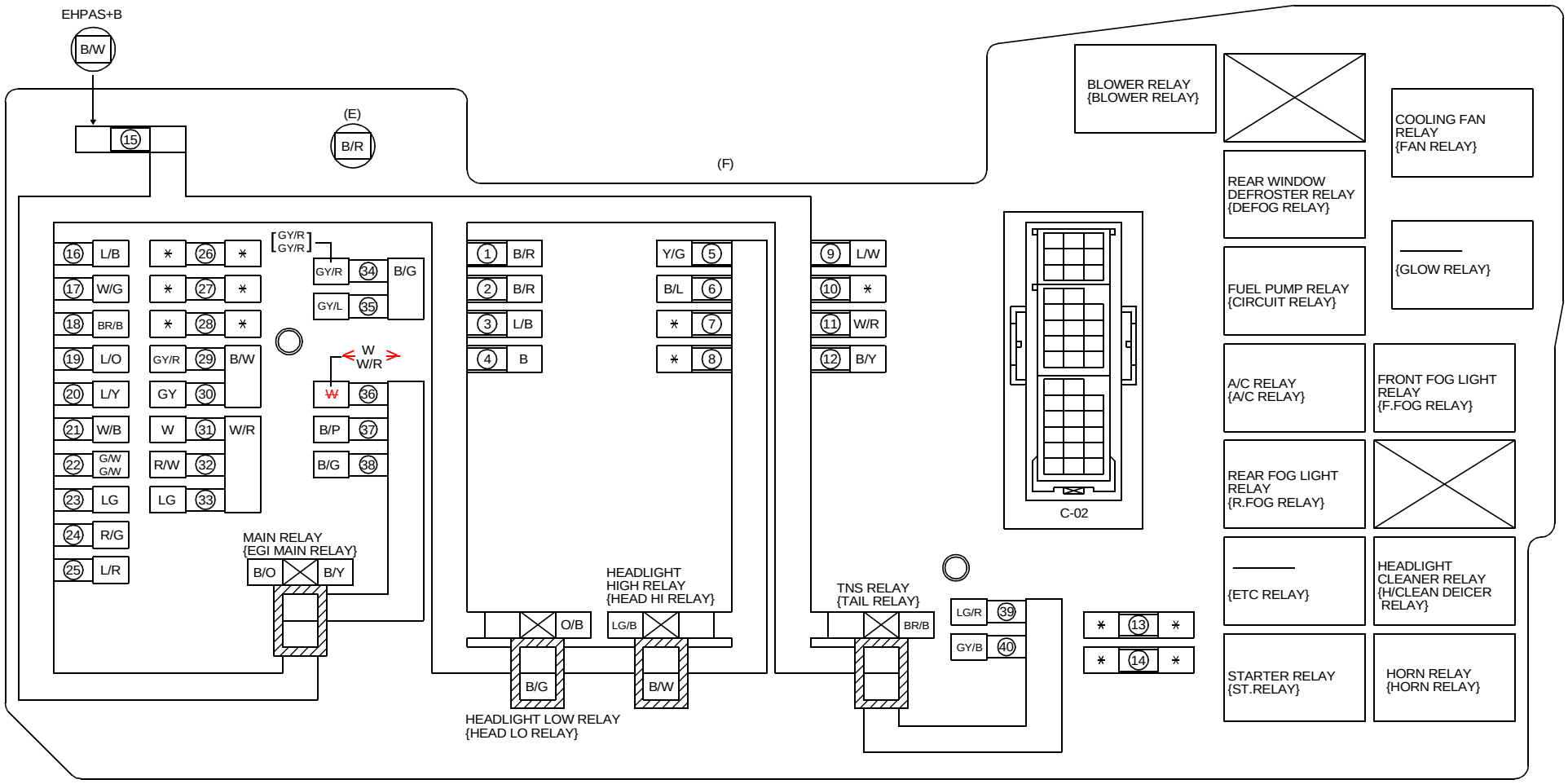

cardiagn.com

FUSE BOX

F-01 MAIN FUSE BLOCK

(F)

NO.	FUSE NAME	FUSE	NO.	FUSE NAME	FUSE
1	FAN	30A	21	ENG+B	10A
2	FAN	30A	22	STOP	10A
3	P.WIND	40A	23	FUEL	20A
4	IG KEY1	30A	24	HAZARD	10A
5	ABS-V	20A	25	ROOM	15A
6	ABS-P	30A	26	———	———
7	(IG KEY2)	(20A)	27	———	———
8	(HEATER) (DEICER)	(20A)	28	(GLOW SIG)	(7.5A)
9	BLOWER	40A	29	HEAD HR	10A
10	(GLOW) (IG KEY1)	(40A)	30	HEAD HL	10A
11	BTN	40A	31	HORN	15A
12	IG KEY2	40A	32	@SUN ROOF	@20A
13	(CLOSER LH) (P.SLIDE LH)	(20A)	33	(ETC MIRROR) BURGLAR	7.5A
14	(CLOSER RH) (P.SLIDE RH)	(20A)	34	HEAD LR	15A
15	EHPAS	80A	35	HEAD LL	15A
16	FOG	15A	36	ENG BAR2	15A
17	D.LOCK	20A	37	ENG BAR	15A
18	(P.WIND) H/CLEAN	20A	38	INJ	20A
19	MAG	10A	39	ILLUMI	10A
20	DEFOG	25A	40	TAIL	10A

( ) NOT USED
@: IF EQUIPPED

F-02 FUSE BLOCK(I)

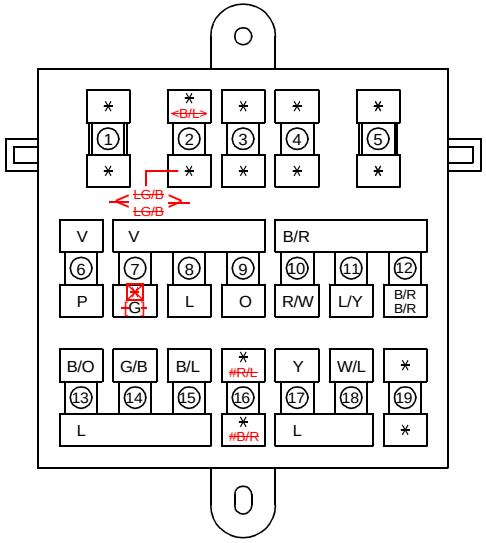

NO.	FUSE NAME	FUSE	NO.	FUSE NAME	FUSE
1	———	———	11	F.WIP	25A
2	@M.DEF	@7.5A	12	R.WIP	15A
3	———	———	13	ENG	5A
4	———	———	14	METER	10A
5	———	———	15	SAS	10A
6	P.OUTLET	15A	16	@S.WARM	@15A
7	@SHIFT/L	@5A	17	ABS/DSC	5A
8	CIGAR	15A	18	EHPAS	5A
9	MIRROR	7.5A	19	———	———
10	A/C	10A			

~~[ ] ATX~~
~~< > WITH HEATED OUTER MIRROR~~
~~#: WITH SEAT WARMER~~
@: IF EQUIPPED
*: VACANT

cardiagn.com

COMMON CONNECTOR LIST

C-01 IGNITION SWITCH/ KEY REMINDER SWITCH(I)

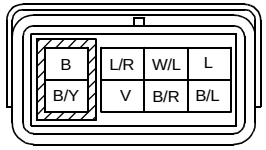

C-02 FRONT(F)-ENGINE(E)

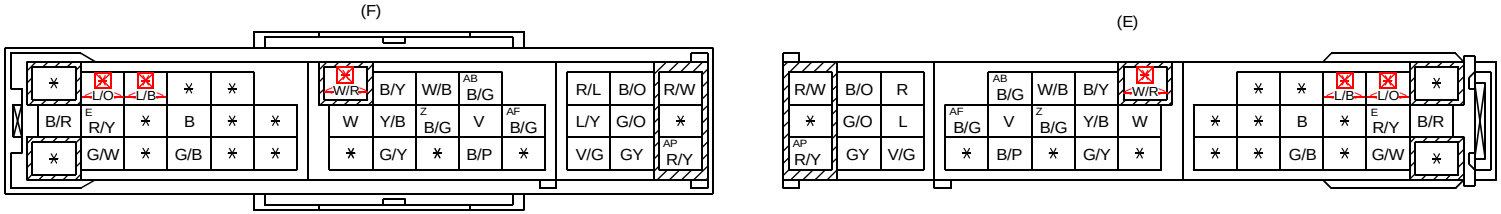

~~<> ATX~~
*: VACANT

C-03 FRONT(F)-INSTRUMENT PANEL(I)

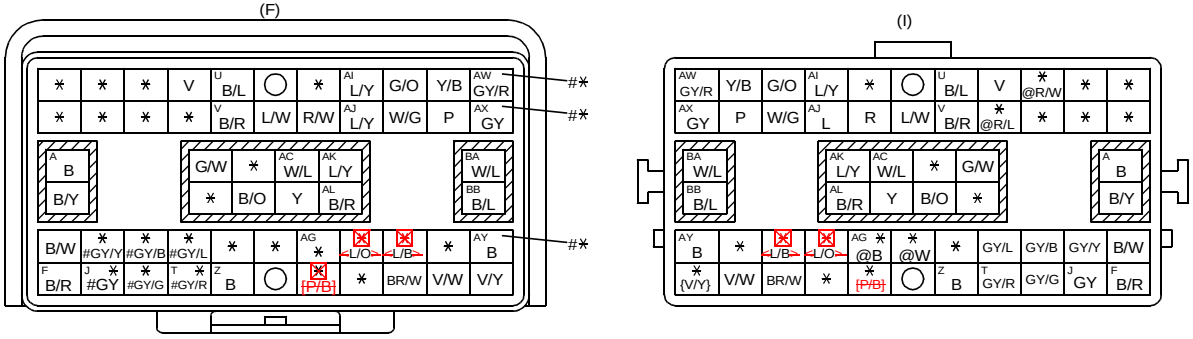

~~<> ATX~~
~~[ ] WITH DSC~~
{ } WITH ADVANCED KEYLESS SYSTEM
@: NOT USED
#: HEADLIGHT(DISCHARGE TYPE)
*: VACANT

C-04 FRONT(F)-REAR(R)

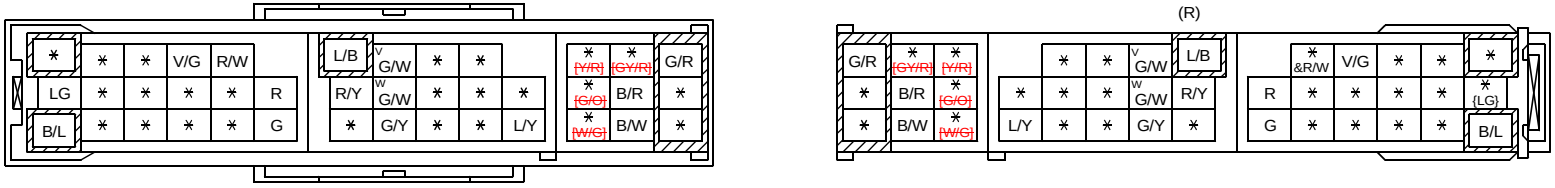

~~[ ] WITH DSC~~
{ } WITH THEFT-DETERRENT SYSTEM
&: WITH SUNROOF
*: VACANT

cardiagn.com

COMMON CONNECTOR LIST

C-06 ENGINE(E)-INJECTION(INJ)

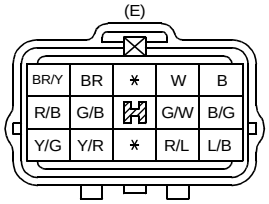

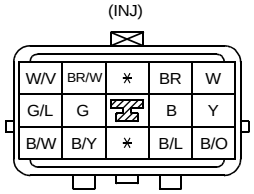

*: VACANT

C-07 INSTRUMENT PANEL(I)-REAR(R)

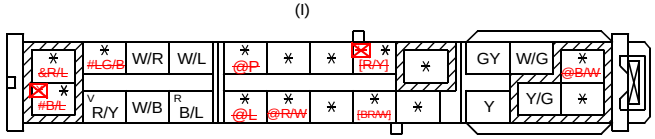

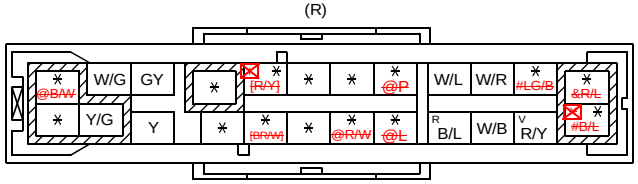

[ ] WITH CAR NAVIGATION SYSTEM
@: WITH RES
#: WITH HEATED OUTER MIRROR
&: WITH SEAT WARMER
*: VACANT

C-08 INSTRUMENT PANEL(I)-REAR(R)

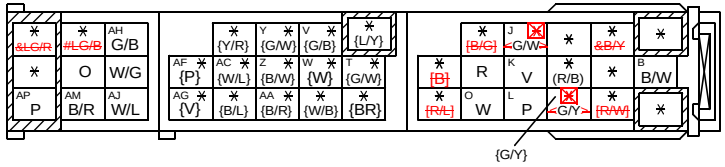

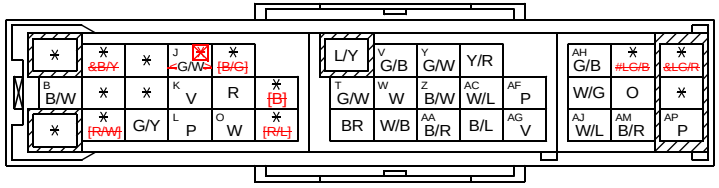

{ } WITH ADVANCED KEYLESS SYSTEM
[ ] WITH CAR NAVIGATION SYSTEM
( ) NOT USED
< > ATX

&: WITH SEAT WARMER
#: WITH HEATED OUTER MIRROR
*: VACANT

cardiagn.com

~~C-10 INSTRUMENT PANEL(I)-SHORT CORD~~

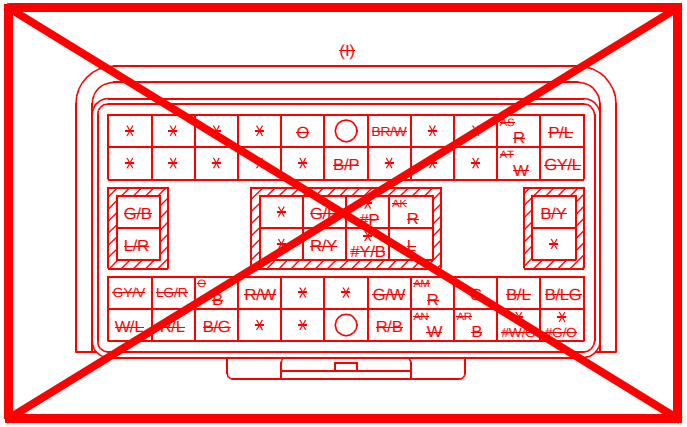

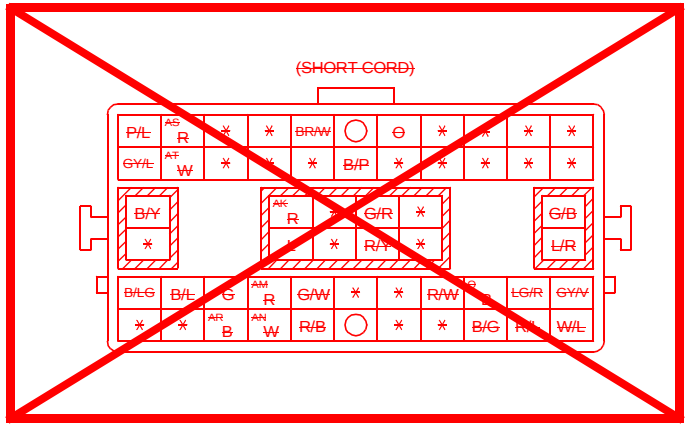

~~(WITH CAR-NAVIGATION SYSTEM)~~

~~#: NOT USED~~
~~*: VACANT~~

C-11 JOINT CONNECTOR(I)

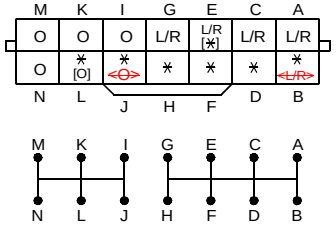

~~<> WITH CAR-NAVIGATION SYSTEM~~
[ ] WITH ADVANCED KEYLESS SYSTEM
*: VACANT

C-12 JOINT CONNECTOR(I)

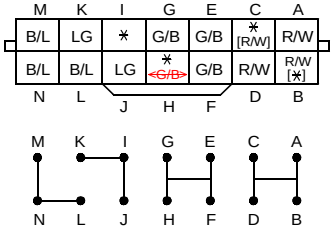

[ ] AUTO A/C
~~<> WITH CAR-NAVIGATION SYSTEM~~
*: VACANT

C-13 JOINT CONNECTOR(I)

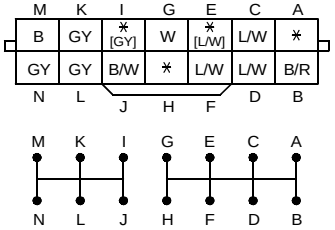

[ ] AUTO A/C
*: VACANT

cardiagn.com

COMMON CONNECTOR LIST

C-14 REAR(R)-DOOR NO.1(DR1)

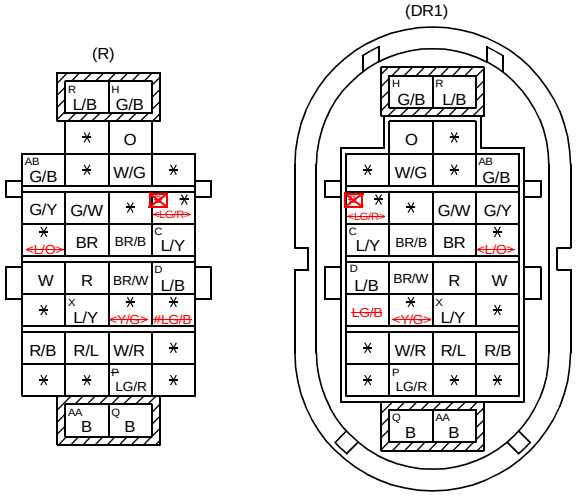

<> WITH DOUBLE LOCKING SYSTEM
#: WITH HEATED OUTER MIRROR
*: VACANT

C-15 REAR(R)-DOOR NO.2(DR2)

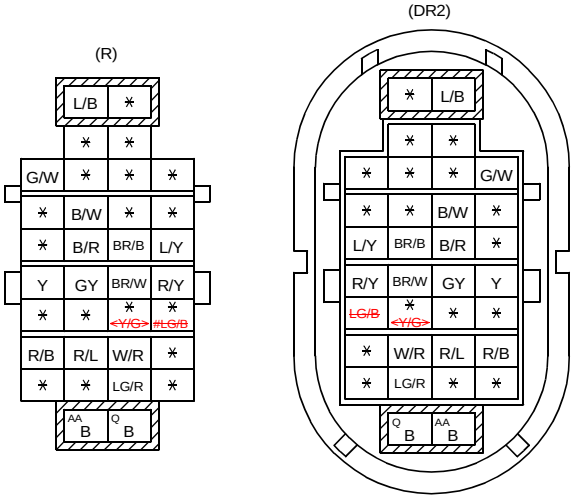

<> WITH DOUBLE LOCKING SYSTEM
#: WITH HEATED OUTER MIRROR
*: VACANT

C-16 REAR(R)-DOOR NO.3(DR3)

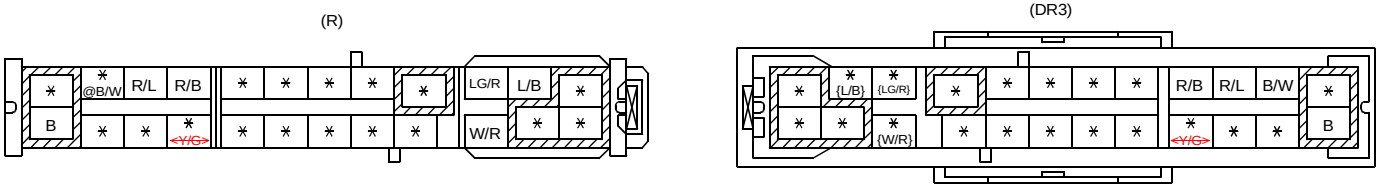

<> WITH DOUBLE LOCKING SYSTEM
{ } WITH REAR POWER WINDOW SYSTEM
@: WITH THEFT-DETERRENT SYSTEM
*: VACANT

C-17 REAR(R)-DOOR NO.4(DR4)

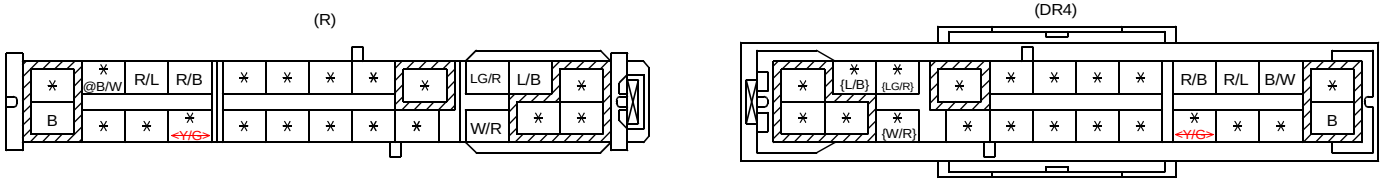

<> WITH DOUBLE LOCKING SYSTEM
{ } WITH REAR POWER WINDOW SYSTEM
@: WITH THEFT-DETERRENT SYSTEM
*: VACANT

cardiagn.com

C-18 REAR(R)-REAR NO.2(R2)

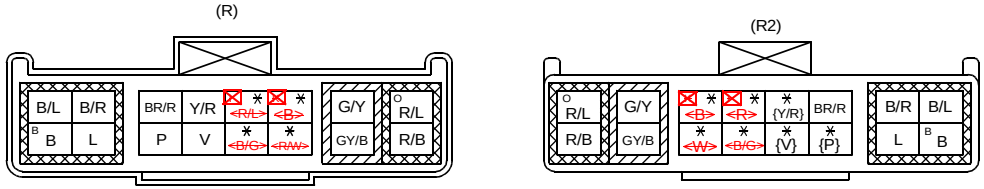

~~<~~ ~~>~~ ~~WITH CAR-NAVIGATION SYSTEM~~
{ } WITH ADVANCED KEYLESS SYSTEM
*: VACANT

C-19 REAR(R)-INTERIOR LIGHT(IN)

C-20 REAR(R)-INTERIOR LIGHT NO.2(IN2)

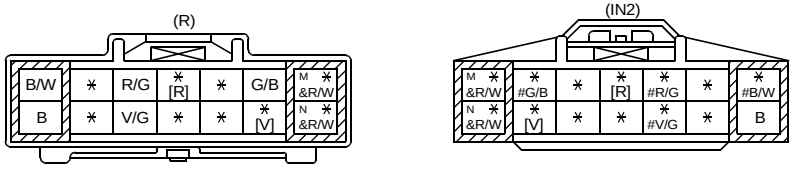

[ ] WITH THEFT-DETERRENT SYSTEM
#: WITH AUTO WIPER
&: WITH SUNROOF
*: VACANT

C-21 REAR(R)-SHORT CORD

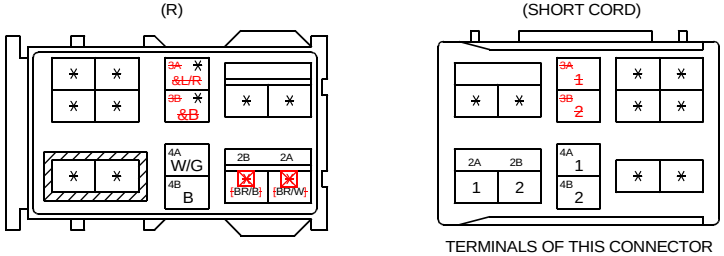

TERMINALS OF THIS CONNECTOR
ARE INDICATED BY NUMBERS.

~~[ ] WITH SIDE AND CURTAIN AIR BAG SYSTEM~~
~~&: WITH SEAT WARMER~~
*: VACANT

C-22 REAR(R)-SHORT CORD

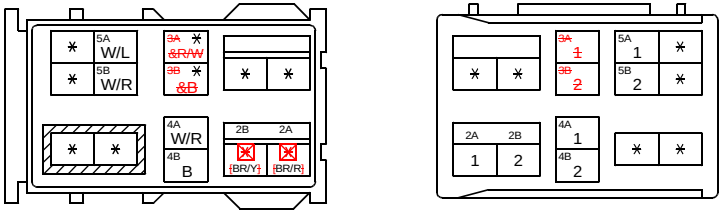

TERMINALS OF THIS CONNECTOR
ARE INDICATED BY NUMBERS.

~~[ ] WITH SIDE AND CURTAIN AIR BAG SYSTEM~~
~~&: WITH SEAT WARMER~~
*: VACANT

cardiagn.com

COMMON CONNECTOR LIST

C-23 REAR(R)-SHORT CORD

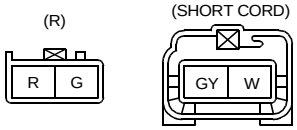

C-24 REAR(R)-SHORT CORD

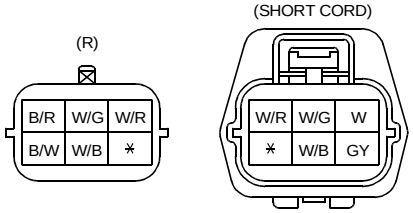

*: VACANT

C-25 FRONT(F)-SHORT CORD

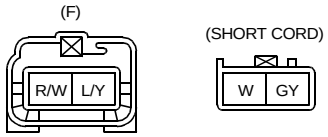

C-26 FRONT(F)-SHORT CORD

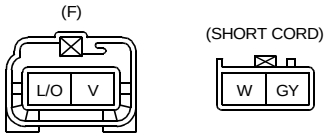

~~C-27 REAR(R)-REAR NO.4(R4)~~

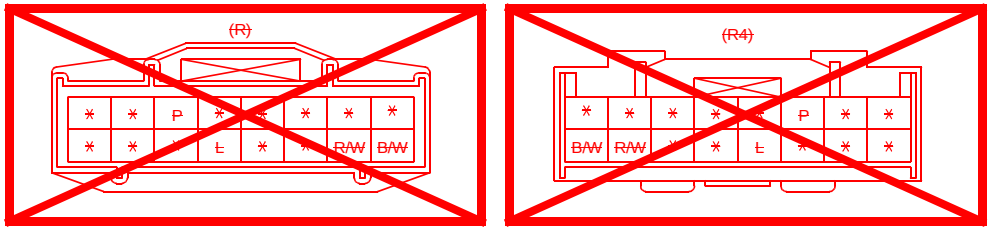

~~(WITH RES)~~

~~*: VACANT~~

C-28 REAR(R)-REAR NO.4(R4)

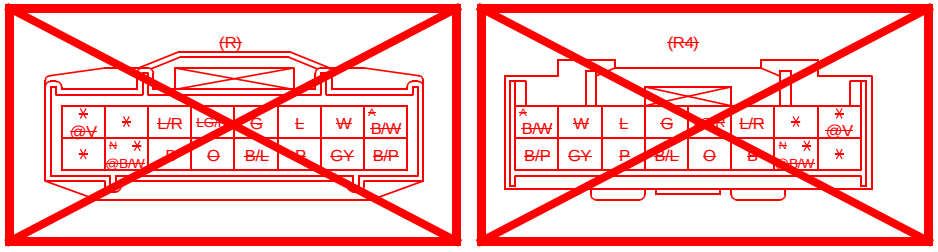

~~(WITH RES)~~

~~@: WITH THEFT-DETERRENT SYSTEM~~
~~*: VACANT~~

(~~WITHOUT RES~~/WITH THEFT-DETERRENT SYSTEM)

*: VACANT

cardiagn.com

COMMON CONNECTOR LIST

C-29 JOINT CONNECTOR(I)

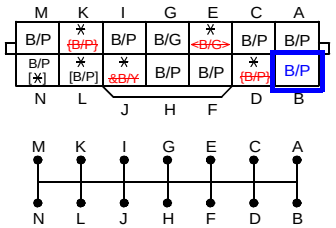

~~{ } WITH CAR-NAVIGATION SYSTEM~~
~~&: WITH SEAT WARMER~~
[ ] AUTO A/C
~~< > WITH DSC~~
*: VACANT

~~C-30 JOINT CONNECTOR(I)~~

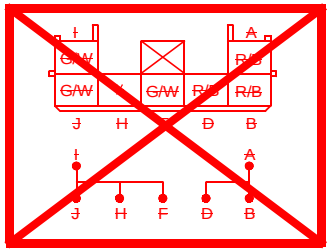

~~(WITH CAR-NAVIGATION SYSTEM)~~

~~*: VACANT~~

C-31 JOINT CONNECTOR(I)

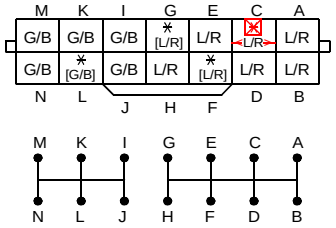

~~< > ATX~~
[ ] WITH ADVANCED KEYLESS SYSTEM
*: VACANT

~~C-32 INSTRUMENT PANEL(I)-SHORT CORD~~

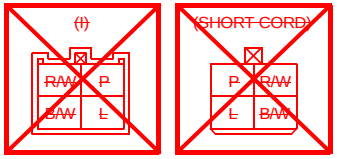

~~(WITH RES/WITHOUT CAR-NAVIGATION SYSTEM)~~

C-33 JOINT CONNECTOR(I)

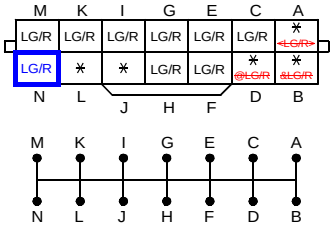

~~< > WITH DSC~~
~~&: WITH SEAT WARMER~~
~~@: WITH CAR-NAVIGATION SYSTEM~~
*: VACANT

C-34 JOINT CONNECTOR(F)

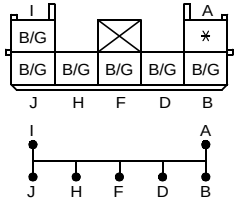

*: VACANT

C-35 JOINT CONNECTOR(F)

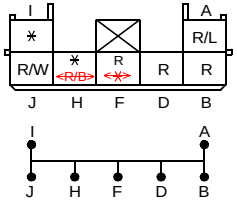

~~< > WITH DSC~~
*: VACANT

C-36 JOINT CONNECTOR(F)

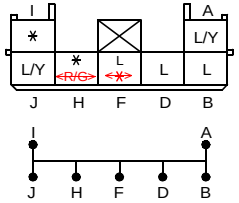

~~< > WITH DSC~~
*: VACANT

cardiagn.com

cardiagn.com

THIS PAGE INTENTIONALLY LEFT BLANK

GROUND POINT

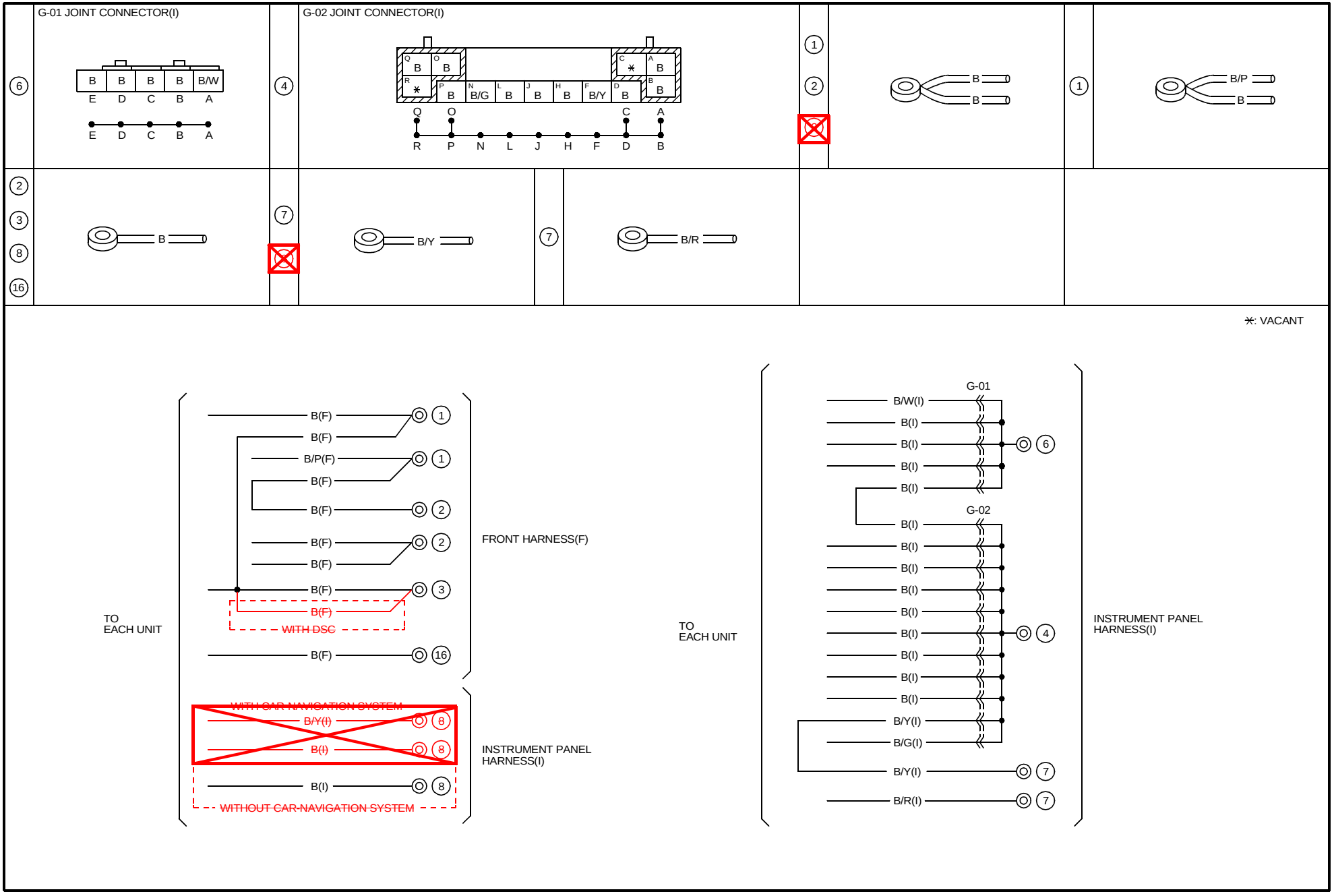

cardiagn.com

HARNESS SYMBOL : (F) (E) (R)

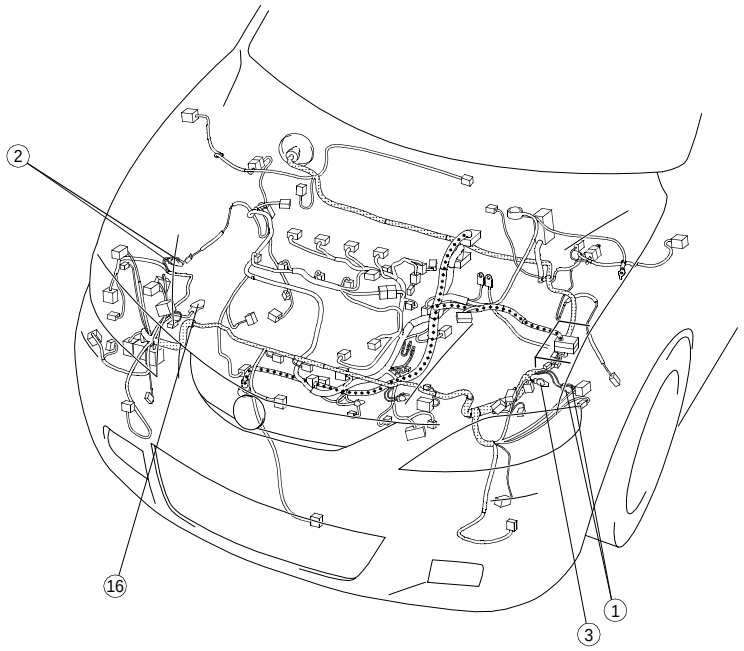

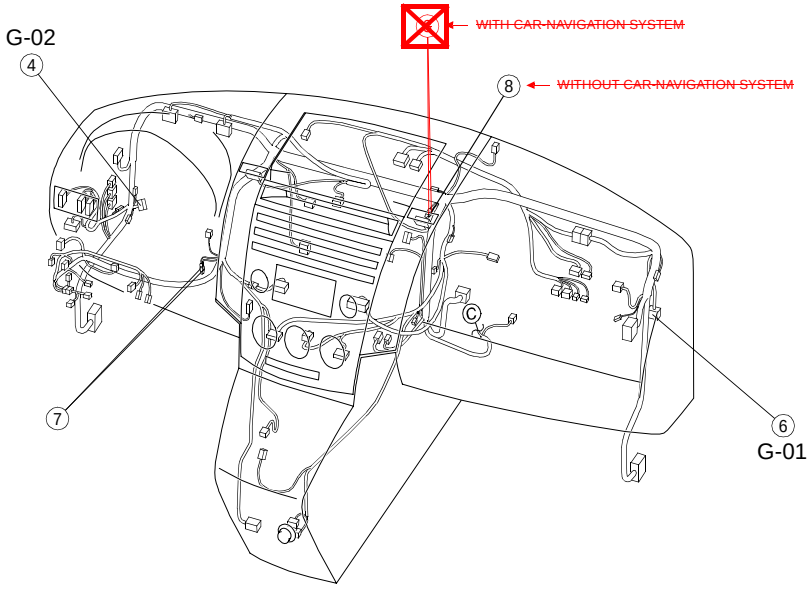

cardiagn.com

GROUND POINT

5, 10, 12, 13, 14	B	5, 10, 11, 12	B, B	15	G, L	15	L	

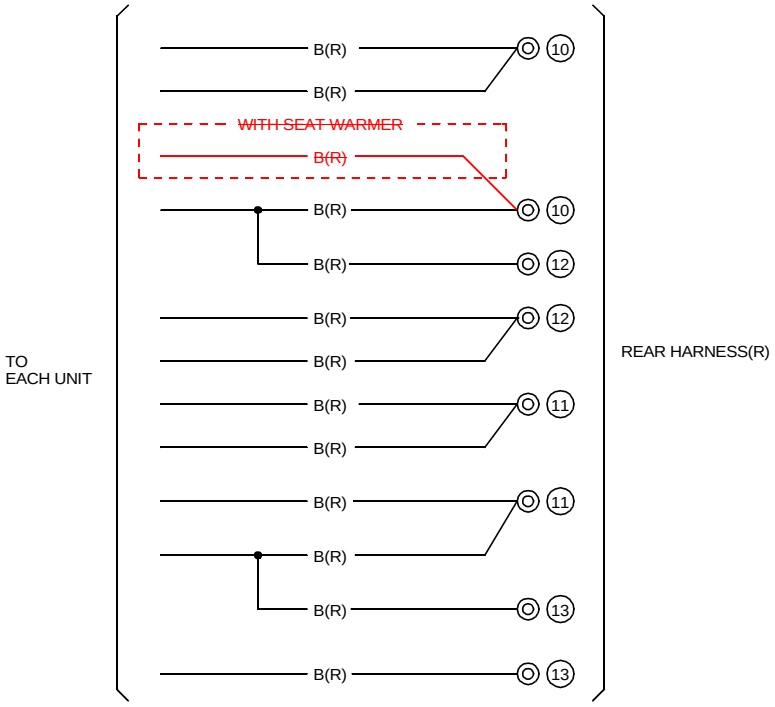

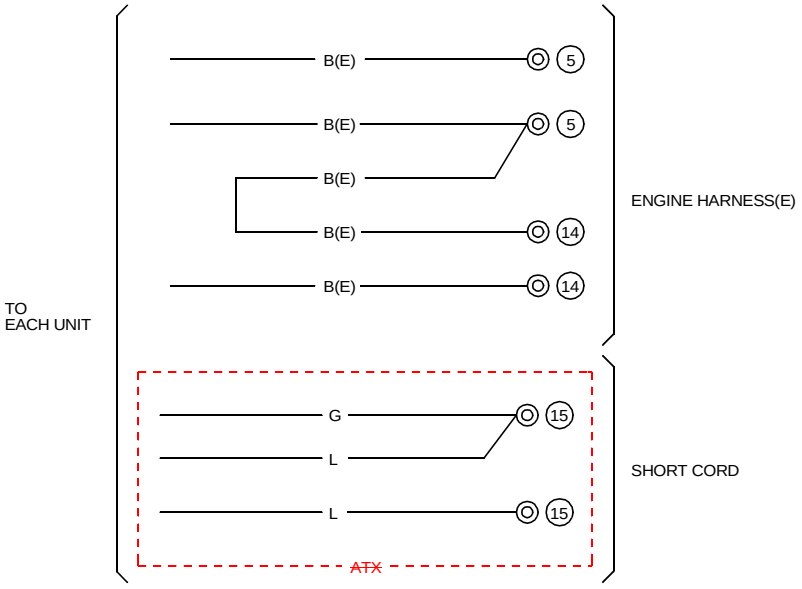

cardiagn.com

HARNESS SYMBOL : (F) (E) (R)

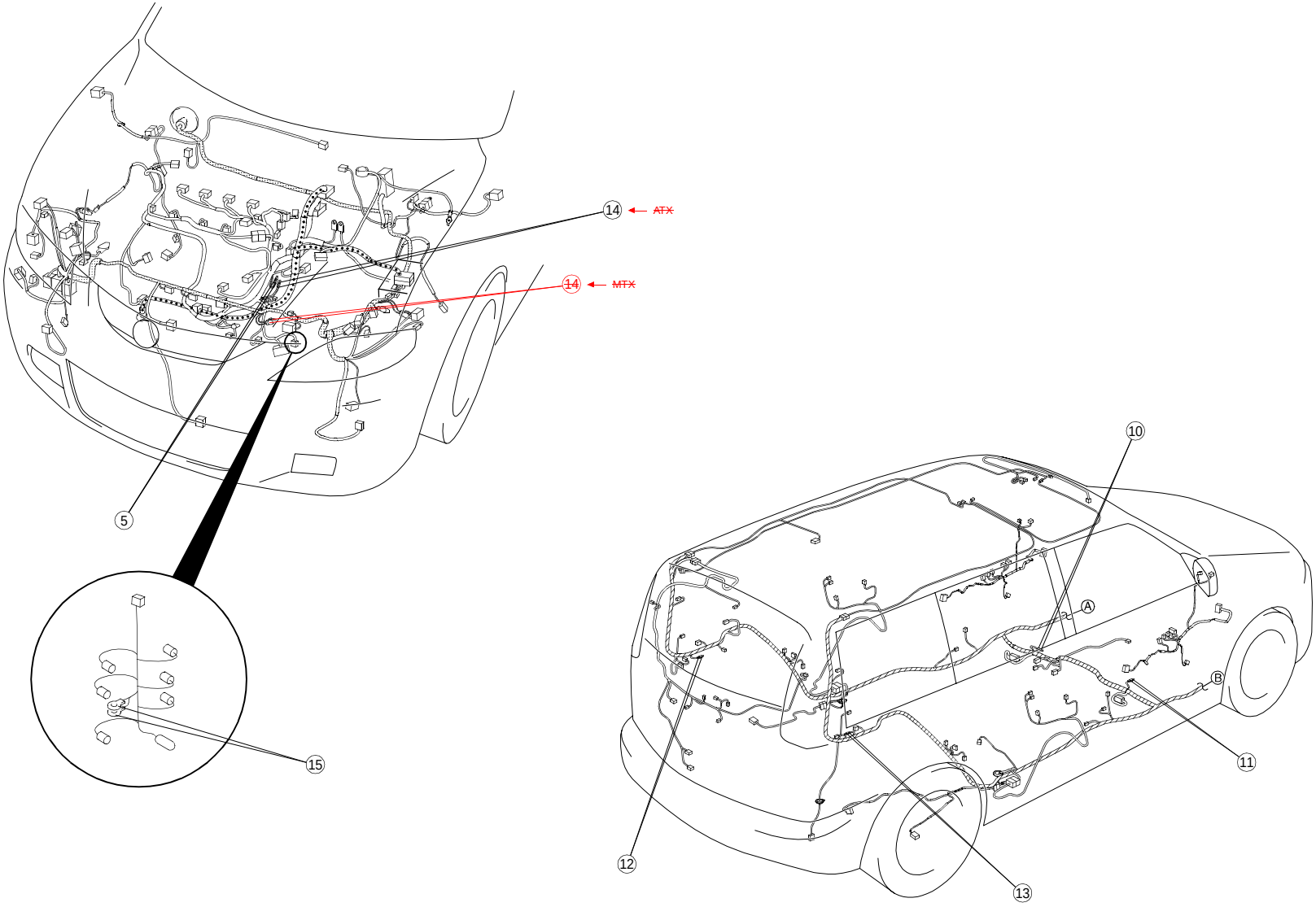

cardiagn.com

DATA LINK CONNECTOR

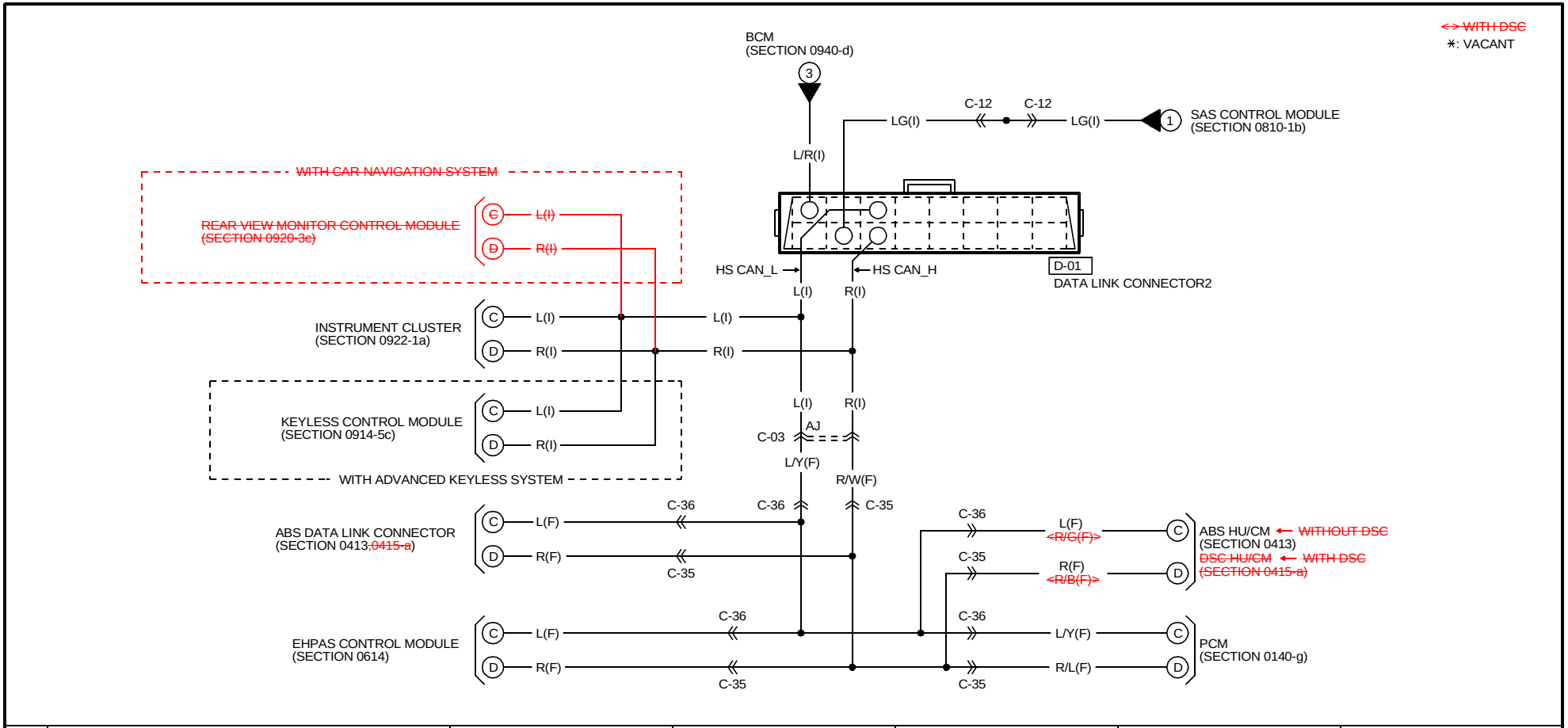

D-01
DATA LINK CONNECTOR2(I)

L/R	*	L	*	*	GY	*	*
G/W	LG	R	B	B/G	L/W	*	*

NOTE:SEEN FROM TERMINAL SIDE

cardiagn.com

HARNESS SYMBOL : (F) (E) (R)

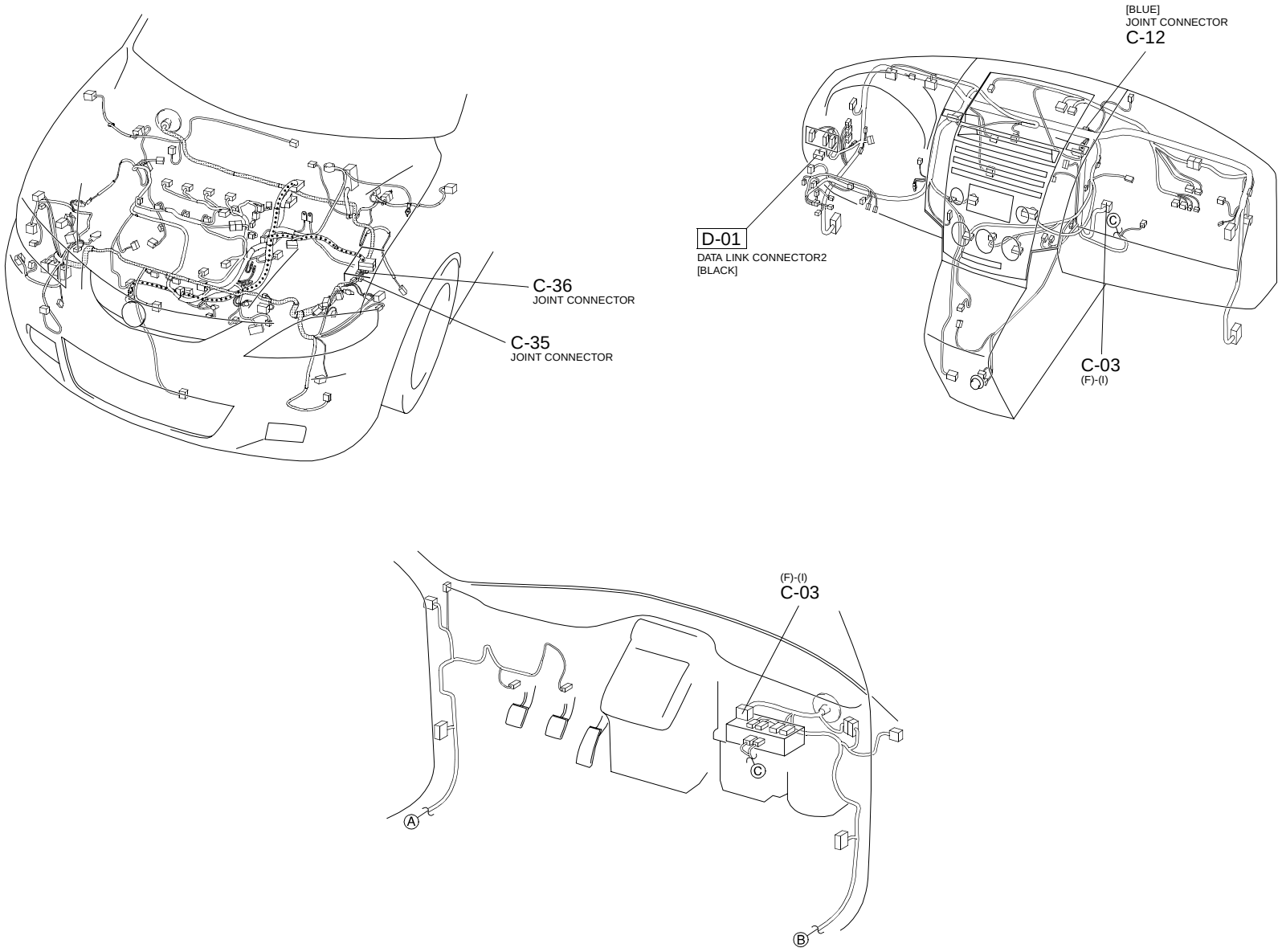

cardiagn.com

DATA LINK CONNECTOR

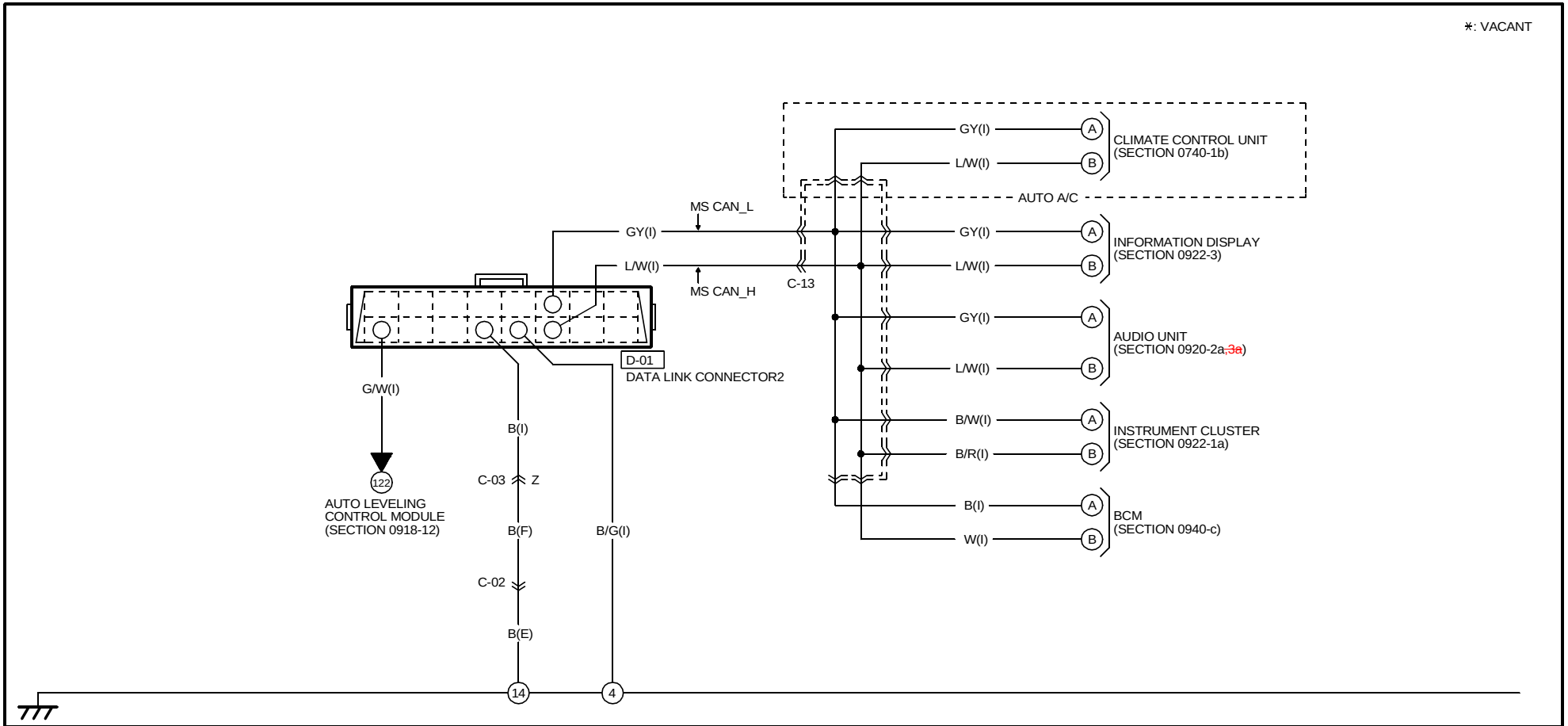

D-01
DATA LINK CONNECTOR2(I)

L/R	*	L	*	*	GY	*	*
G/W	LG	R	B	B/G	L/W	*	*

NOTE:SEEN FROM TERMINAL SIDE

cardiagn.com

HARNESS SYMBOL : (F) (E) (R)

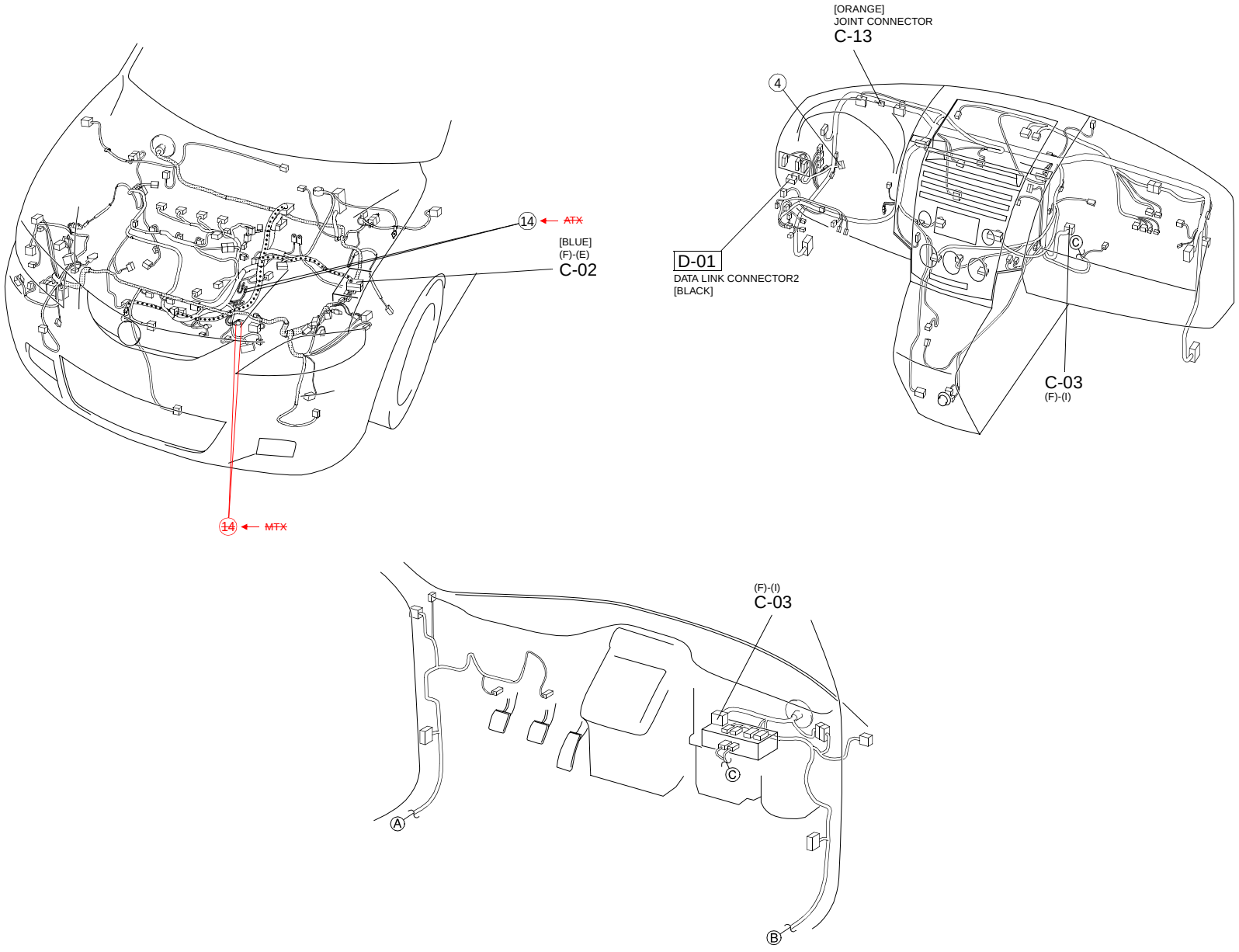

cardiagn.com

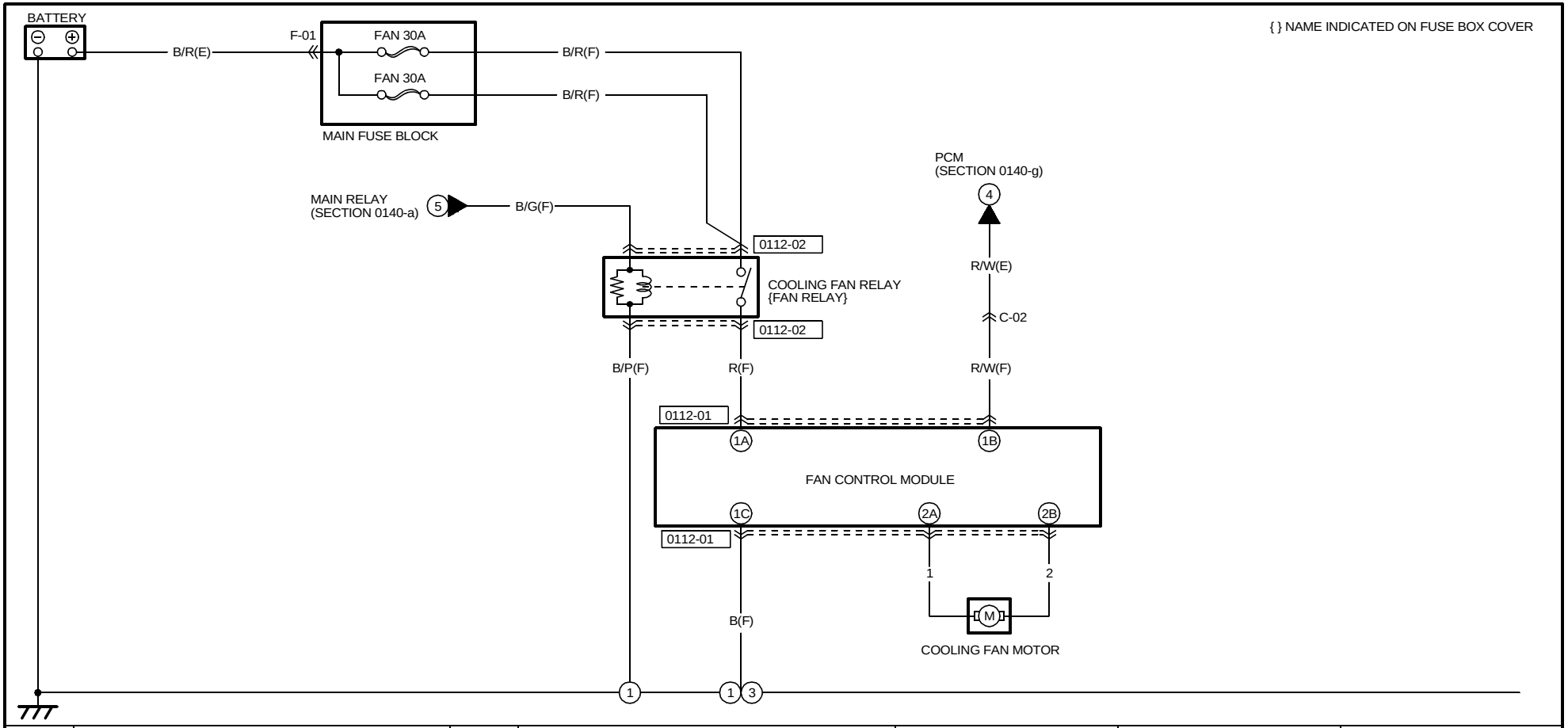

0112-01

FAN CONTROL MODULE

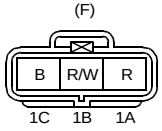

TERMINALS OF THIS CONNECTOR ARE INDICATED BY NUMBERS.

0112-02

COOLING FAN RELAY(F)

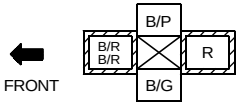

NOTE:SEEN FROM TERMINAL SIDE

cardiagn.com

HARNESS SYMBOL : (F) (E) (R)

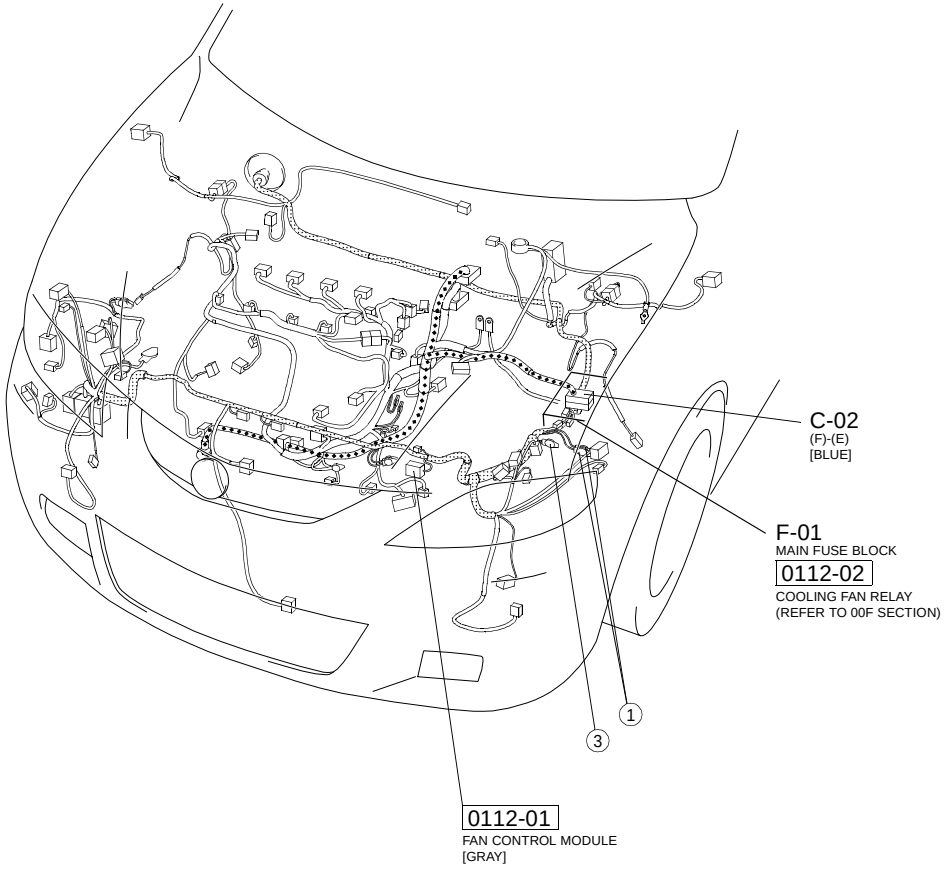

cardiagn.com

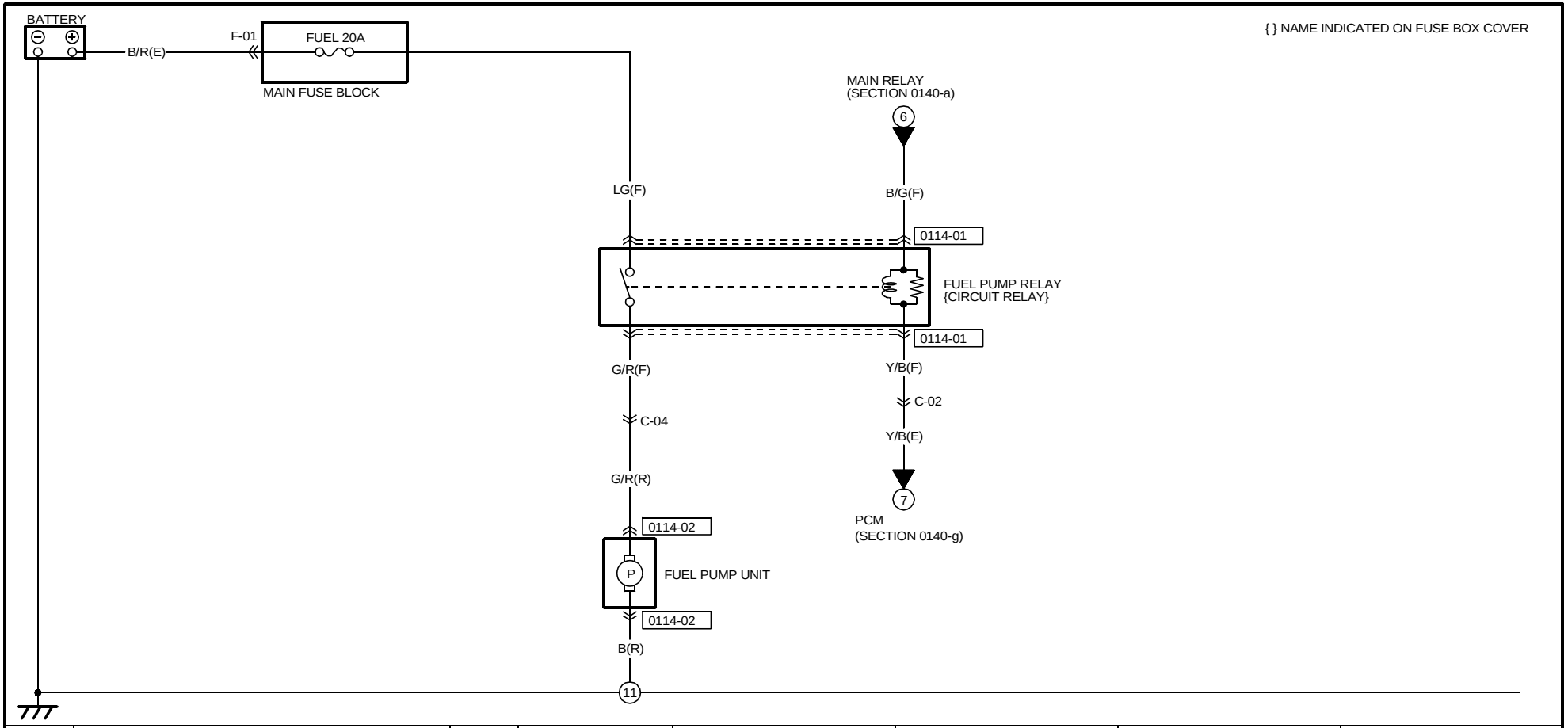

0114-01

FUEL PUMP RELAY(F)

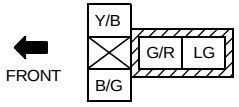

NOTE:SEEN FROM TERMINAL SIDE

0114-02

FUEL PUMP UNIT(R)

cardiagn.com

HARNESS SYMBOL : (F) (E) (R)

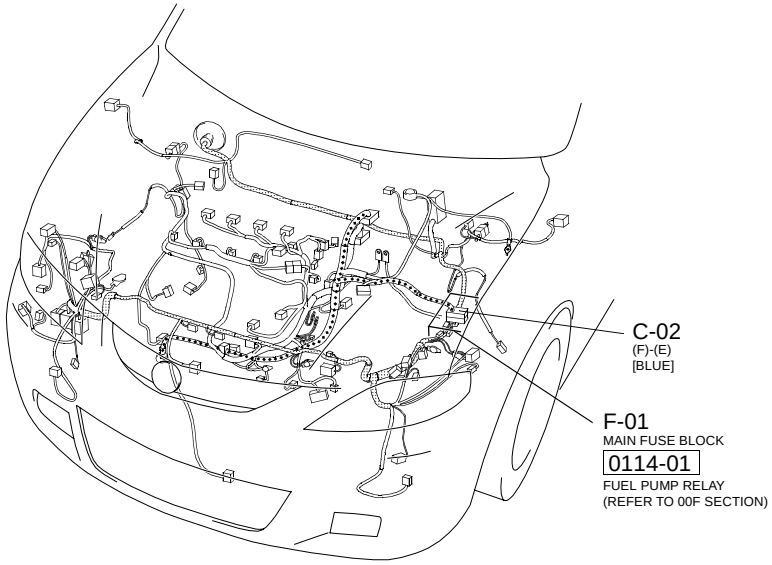

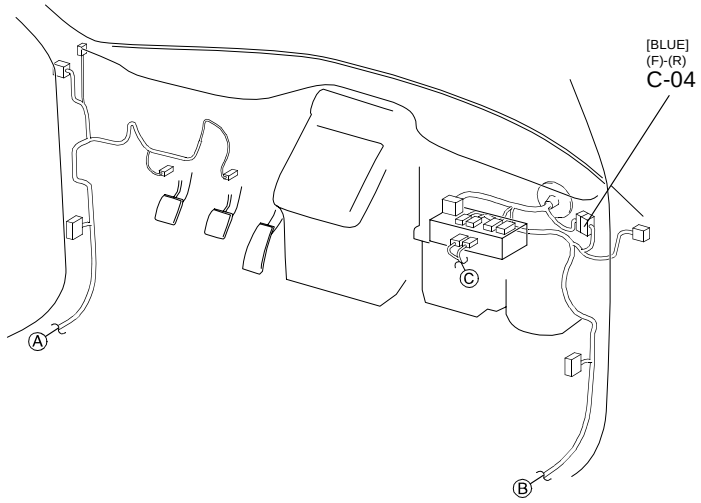

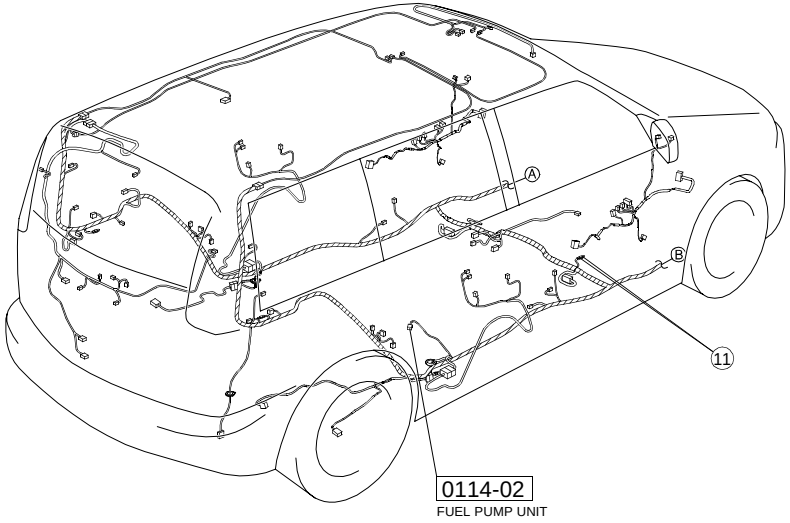

cardiagn.com

CHARGING SYSTEM

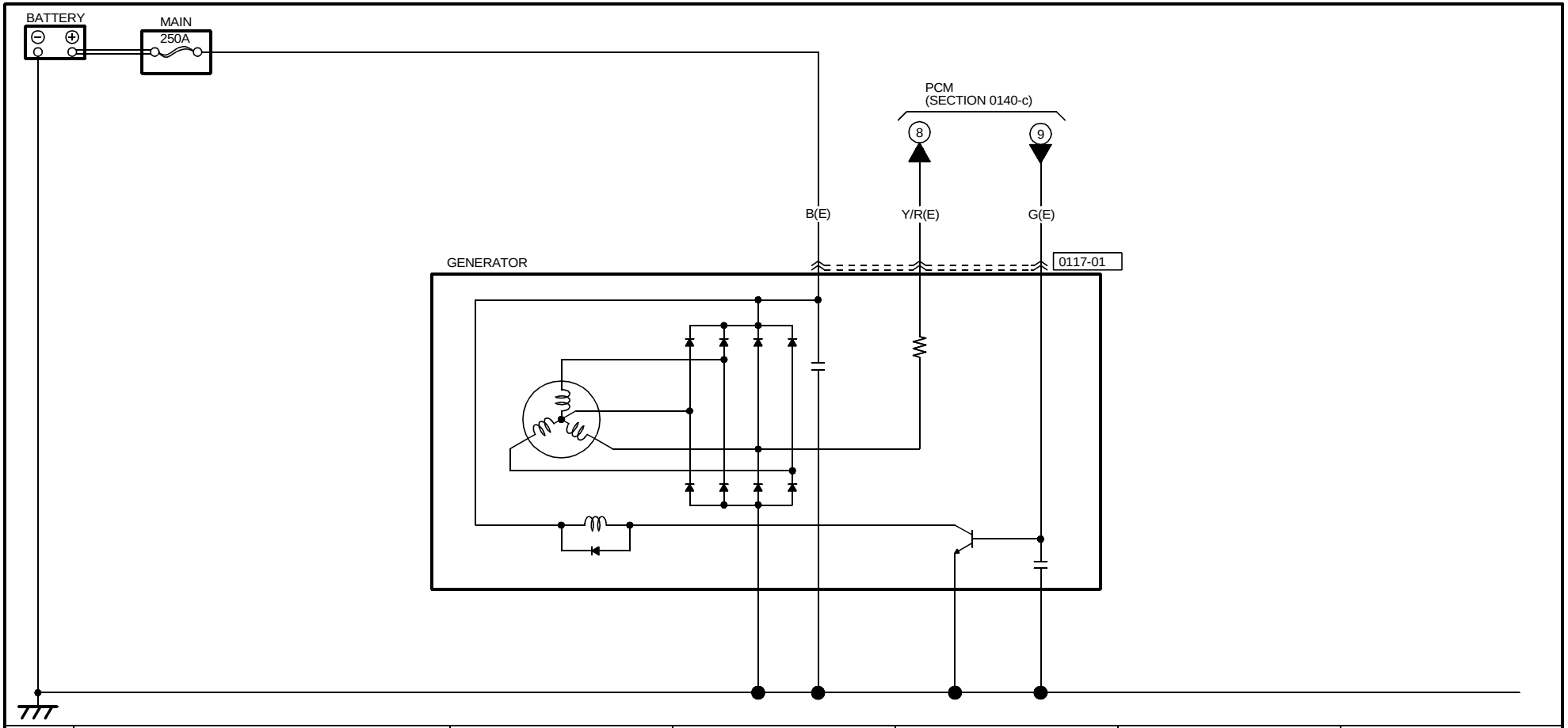

0117-01
GENERATOR(E)

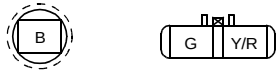

cardiagn.com

HARNESS SYMBOL : (F) (E) (R)

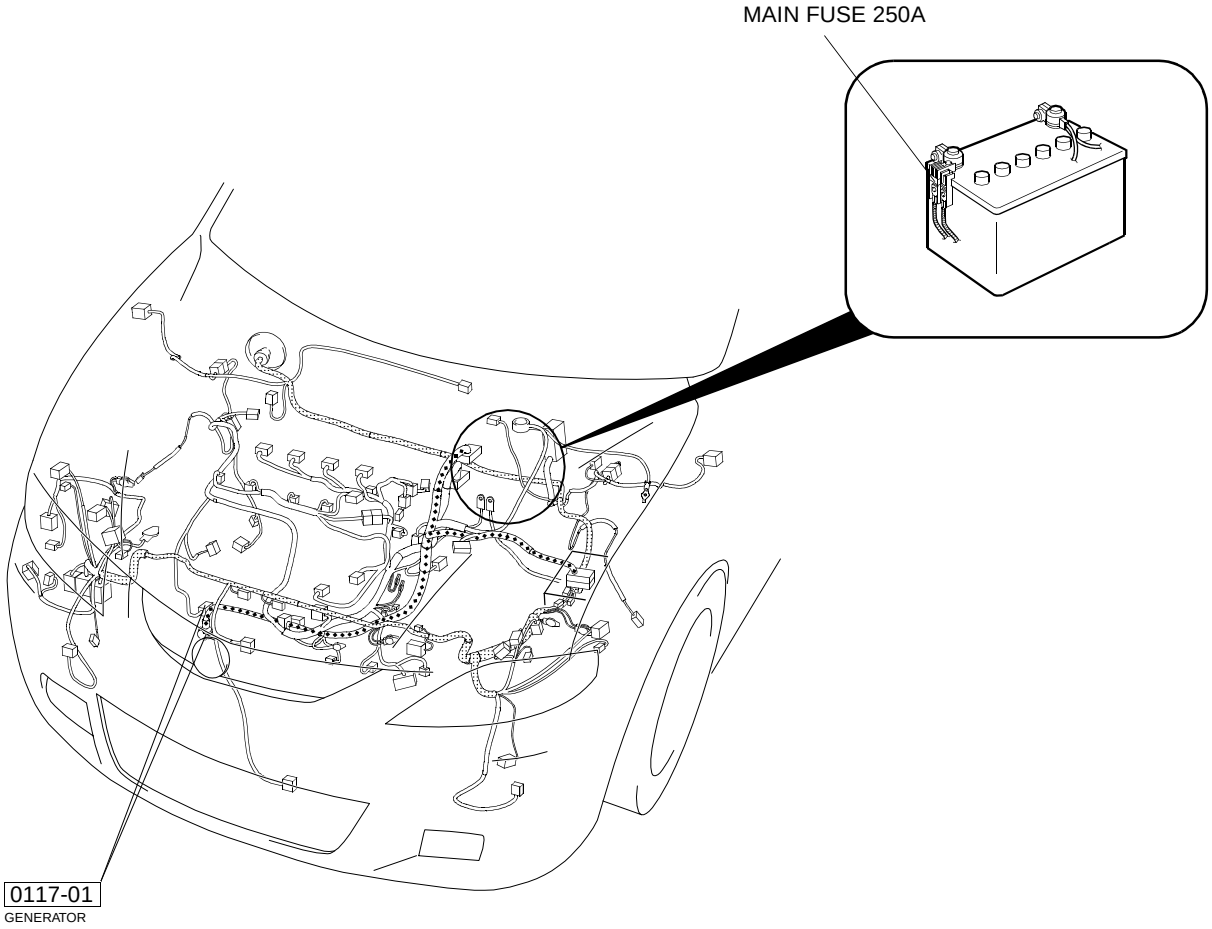

cardiagn.com

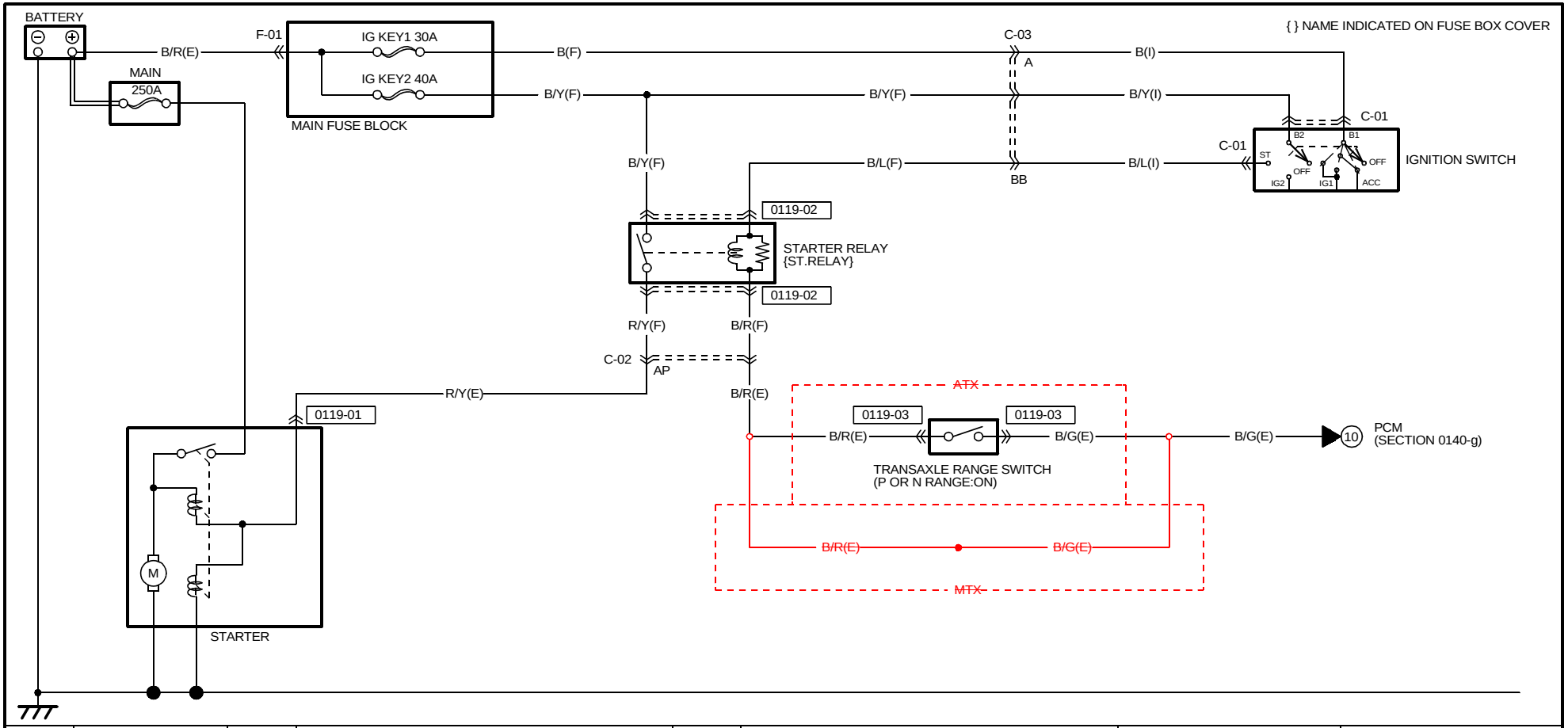

0119-01 STARTER(E)	0119-02 STARTER RELAY(F)	0119-03 TRANSAXLE RANGE SWITCH(E)		
R/Y	FRONT: B/R, B/Y, R/Y, B/L NOTE:SEEN FROM TERMINAL SIDE	B/R, G/B, R/Y, W/R, B/L, B/G (ATX)		

cardiagn.com

HARNESS SYMBOL : (F) (E) (R)

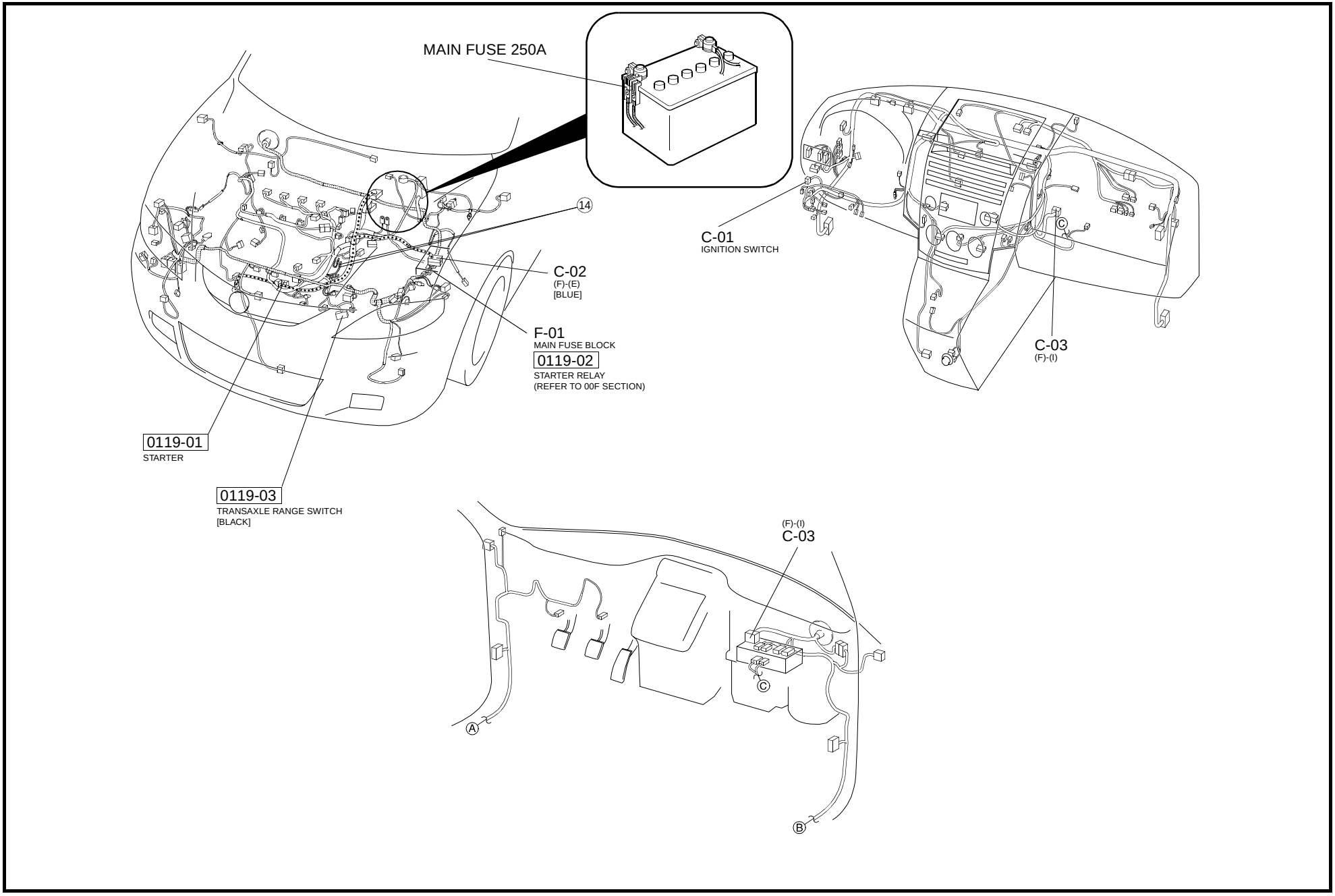

cardiagn.com

CONTROL SYSTEM (INCLUDES AUTOMATIC TRANSAXLE CONTROL INFORMATION)

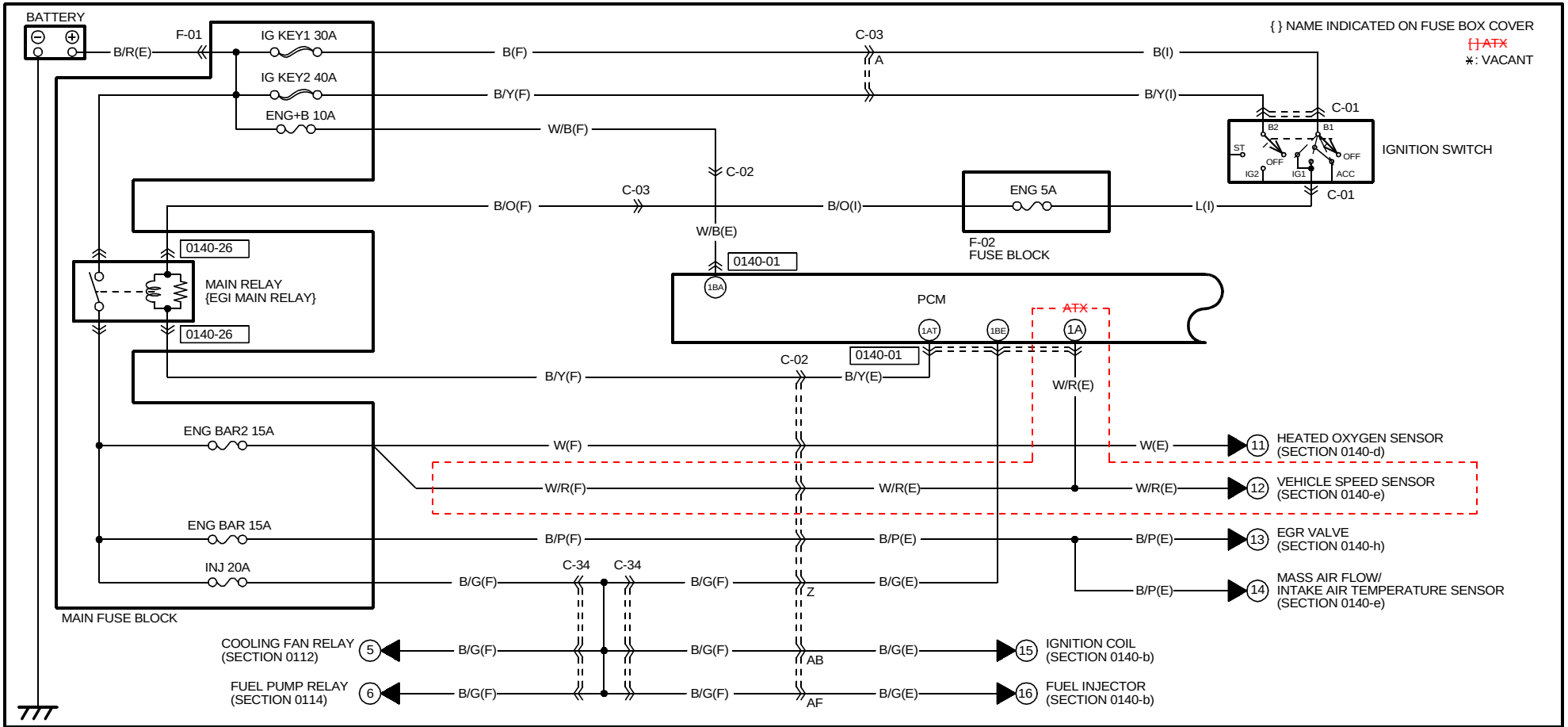

0140-01
PCM(E)

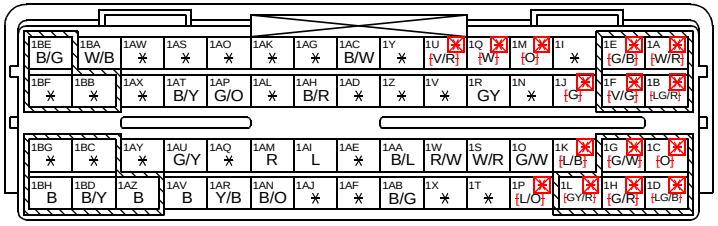

0140-26
MAIN RELAY(F)

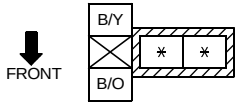

NOTE:SEEN FROM TERMINAL SIDE

cardiagn.com

HARNESS SYMBOL : (F) (E) (R)

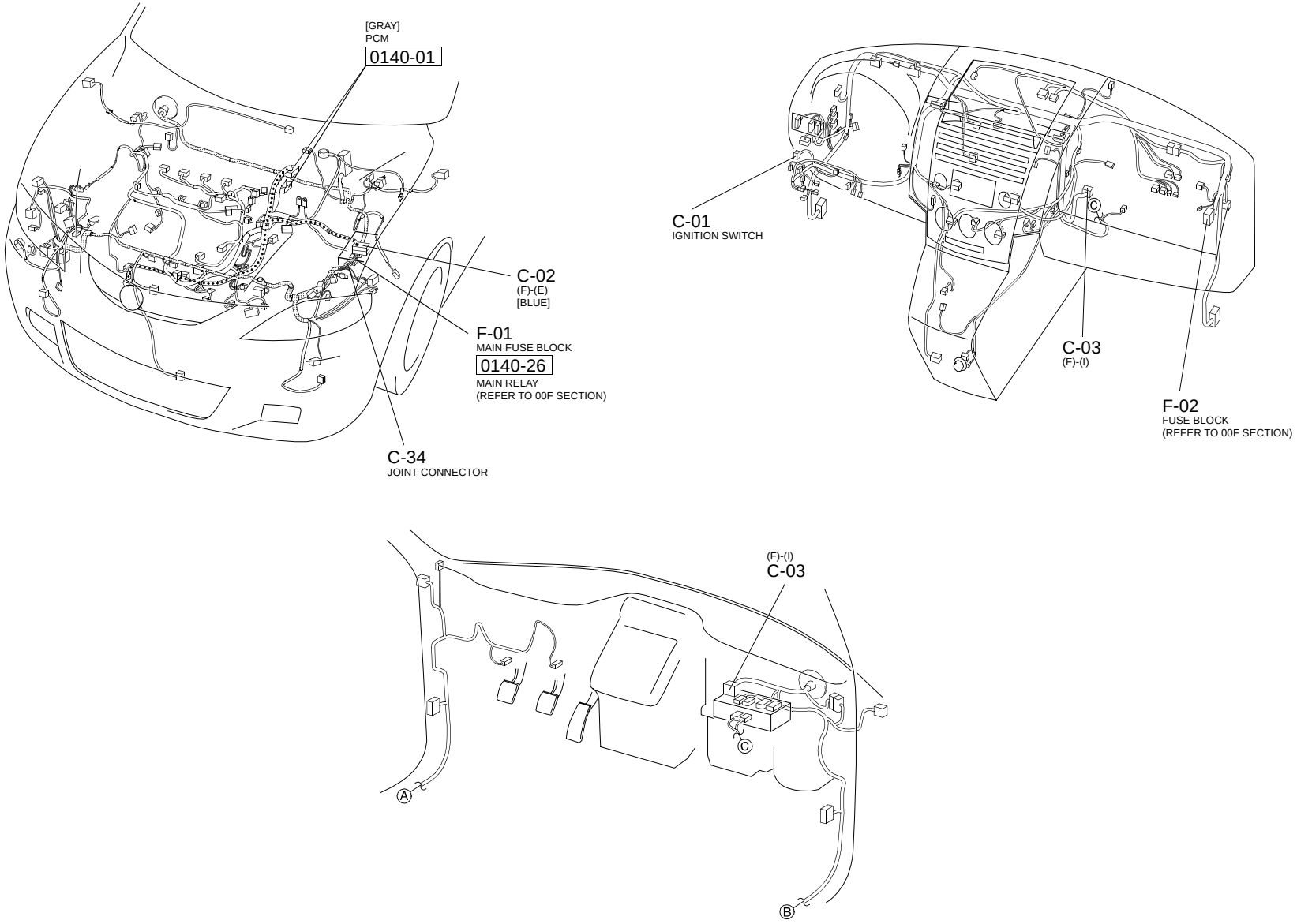

cardiagn.com

CONTROL SYSTEM (INCLUDES AUTOMATIC TRANSAXLE CONTROL INFORMATION)

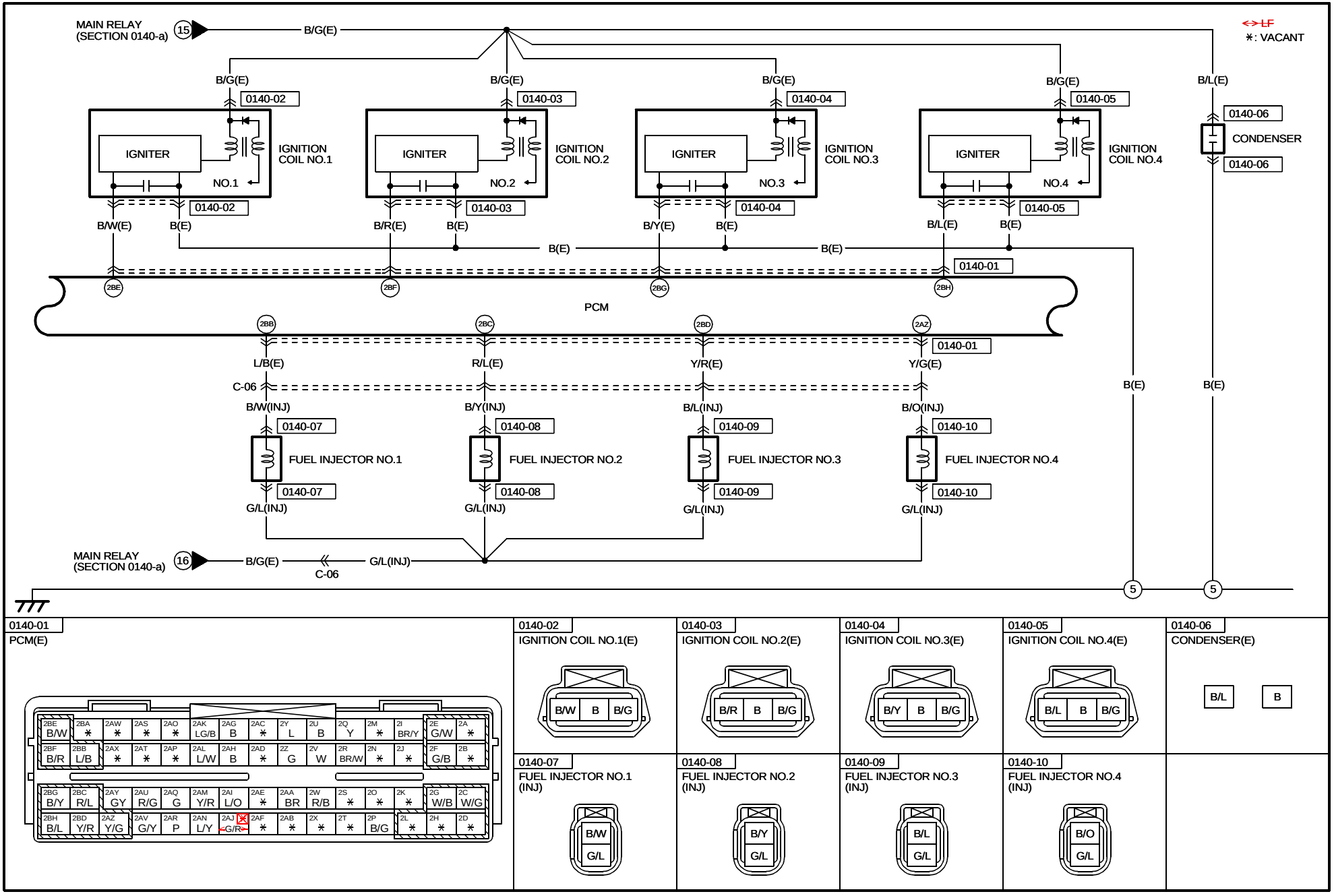

cardiagn.com

HARNESS SYMBOL : (F) (E) (R)

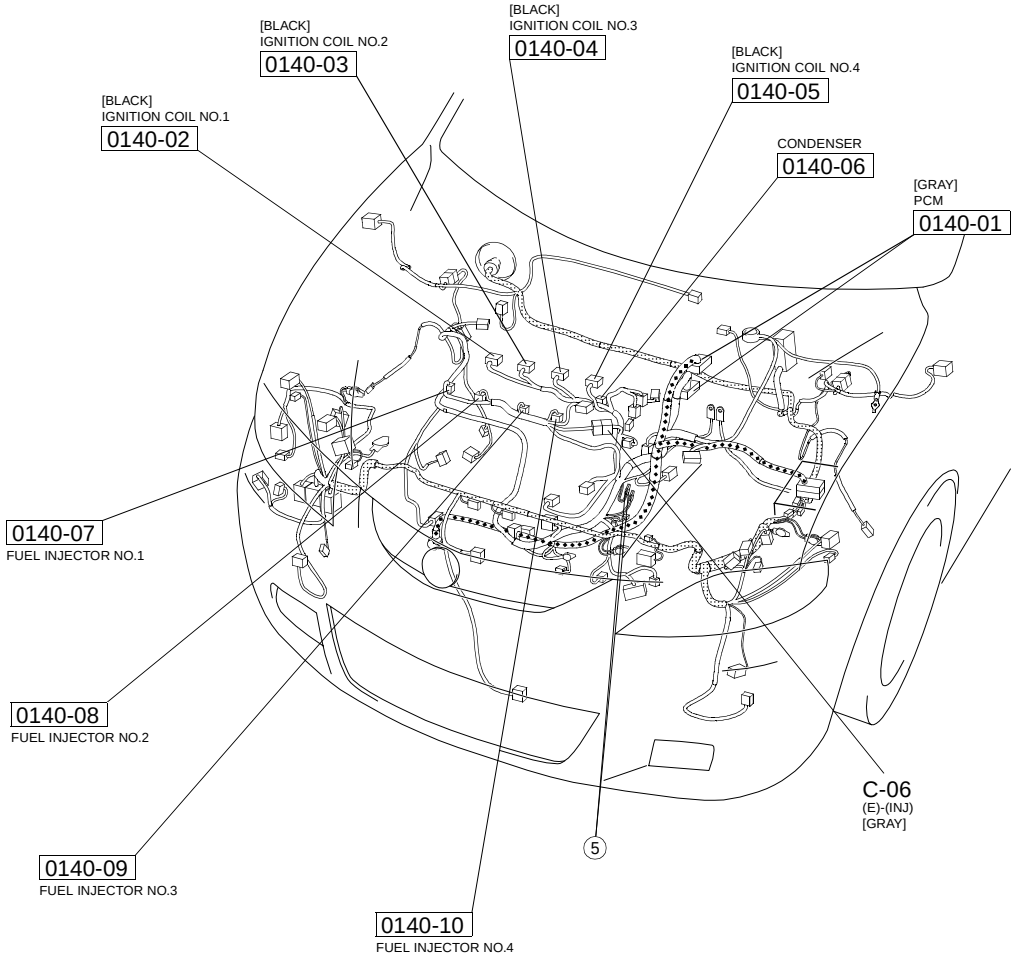

cardiagn.com

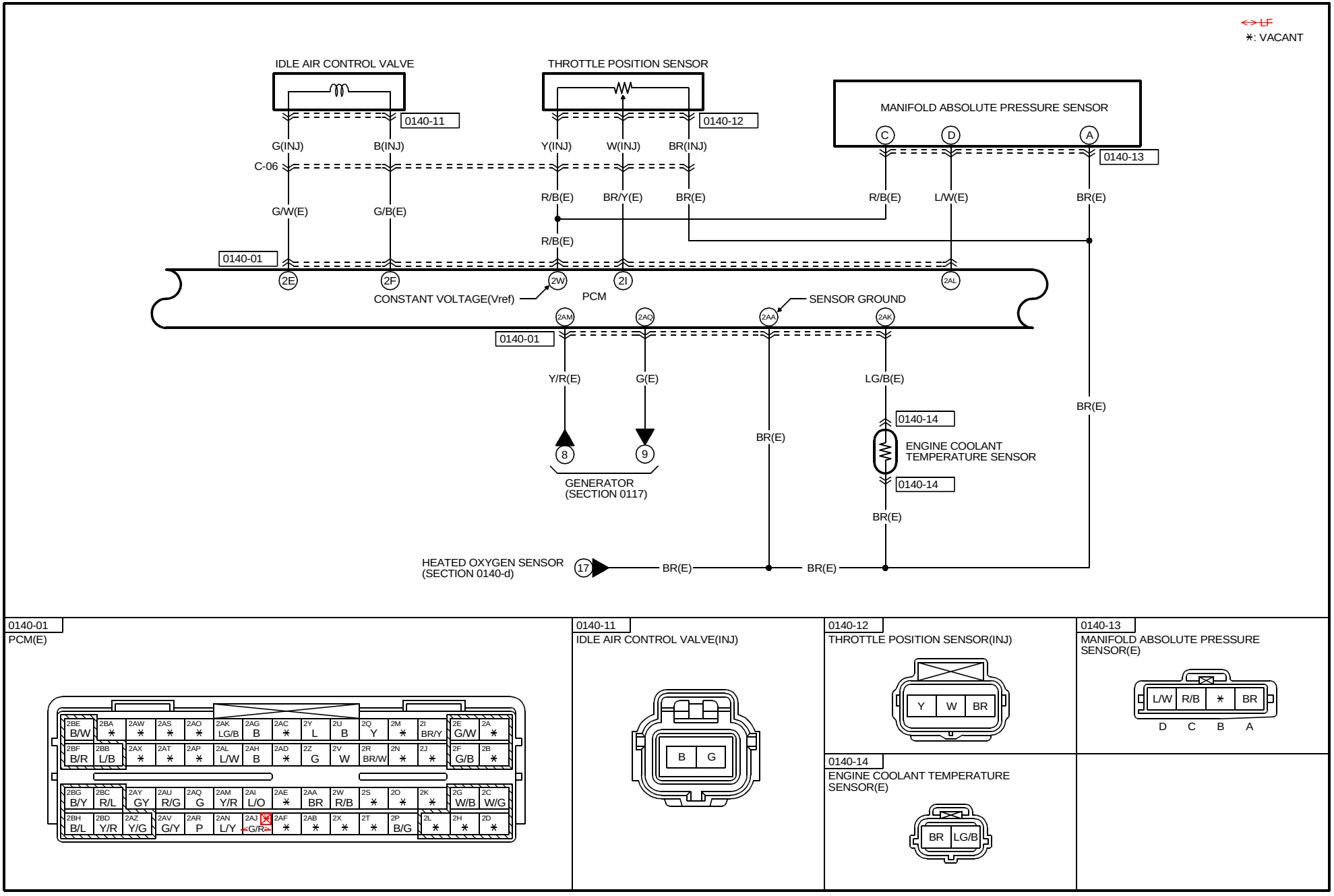

cardiagn.com

HARNESS SYMBOL : (F) (E) (R)

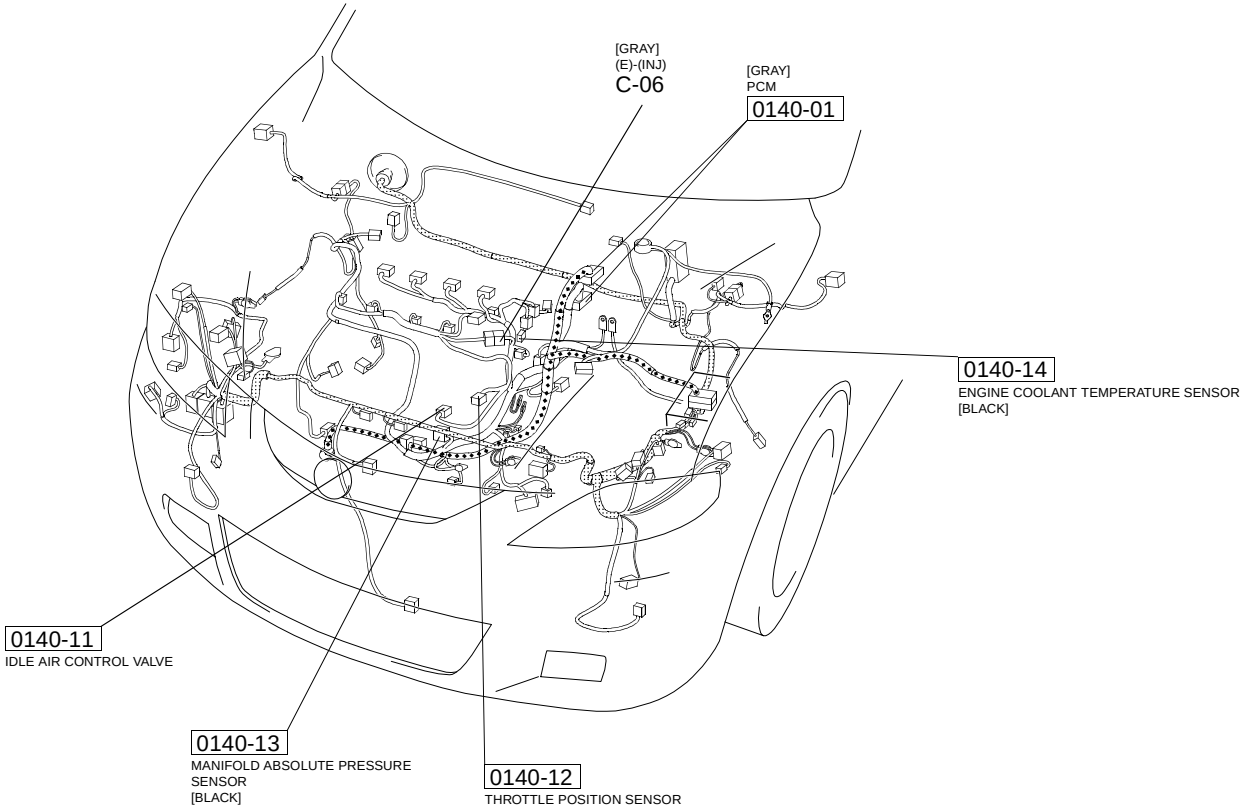

cardiagn.com

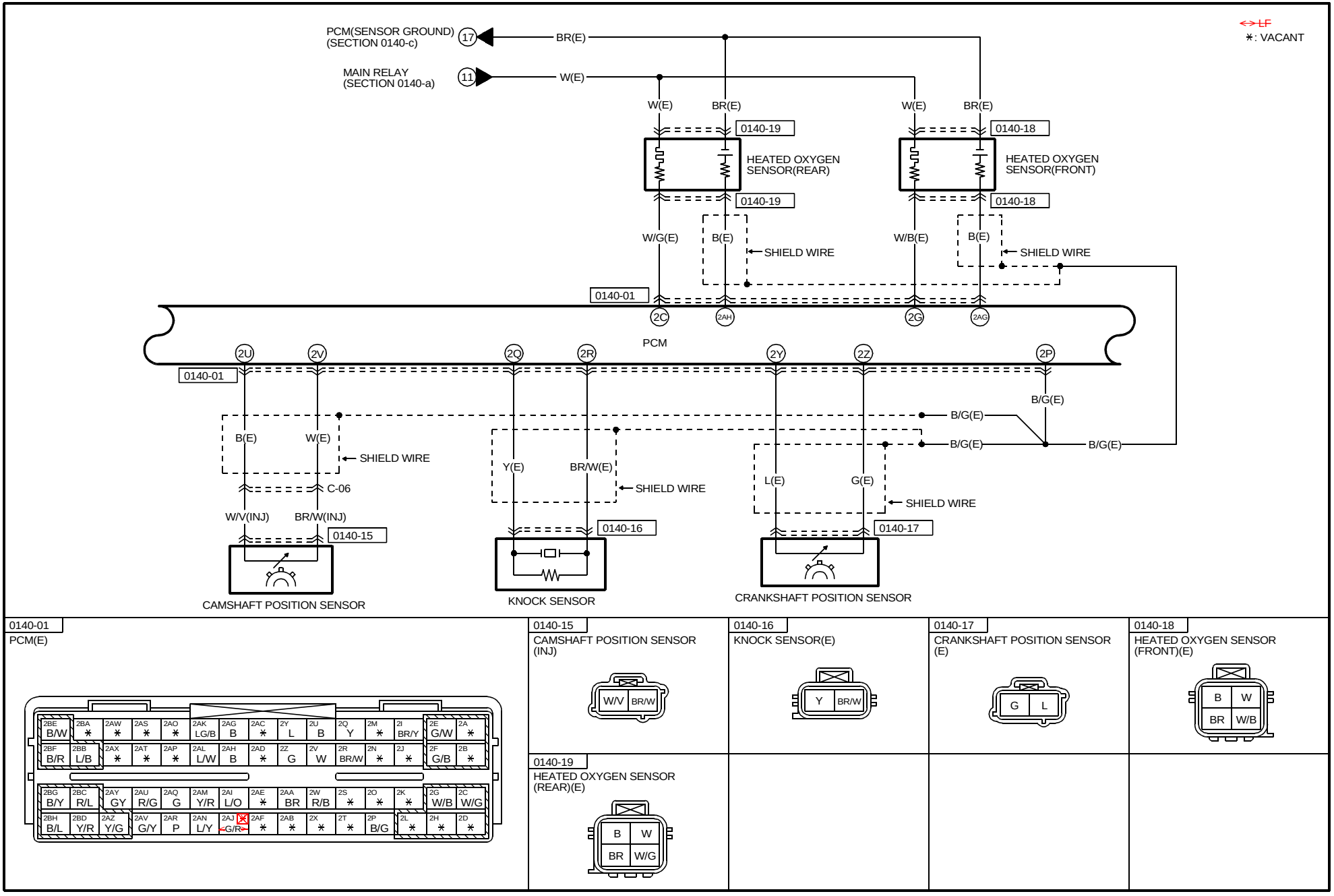

cardiagn.com

HARNESS SYMBOL : (F) (E) (R)

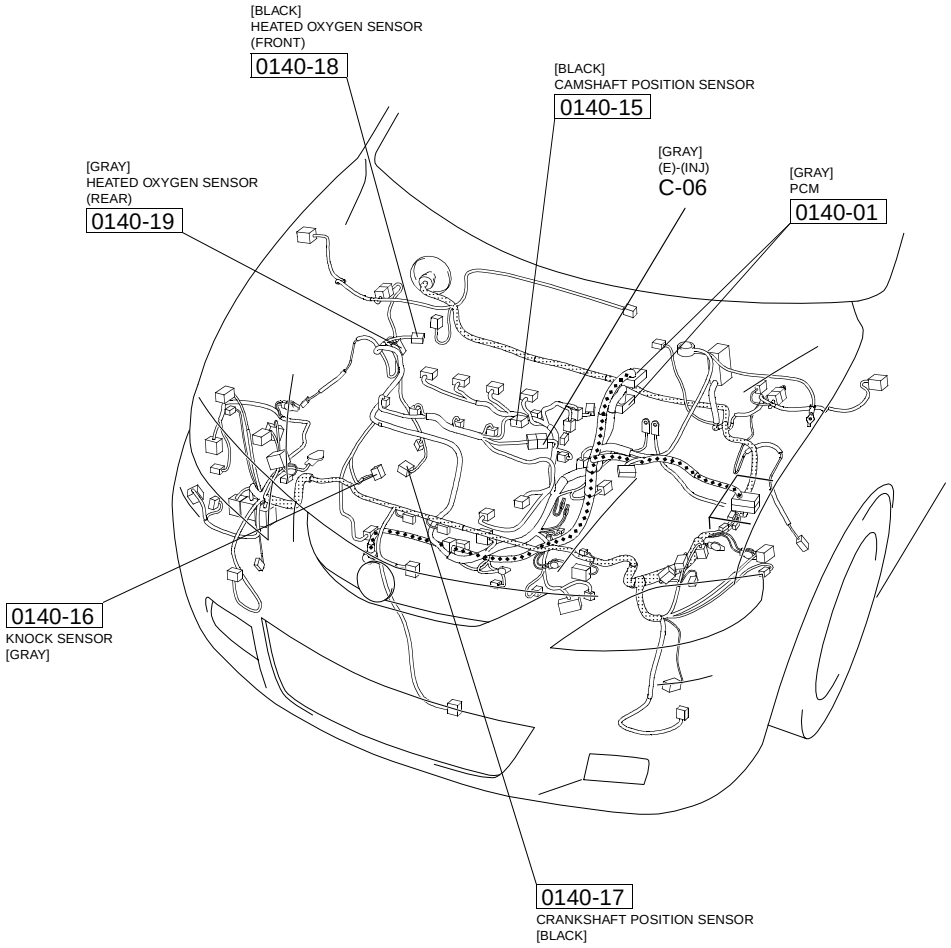

cardiagn.com

[ ] ~~ATX~~
*: VACANT

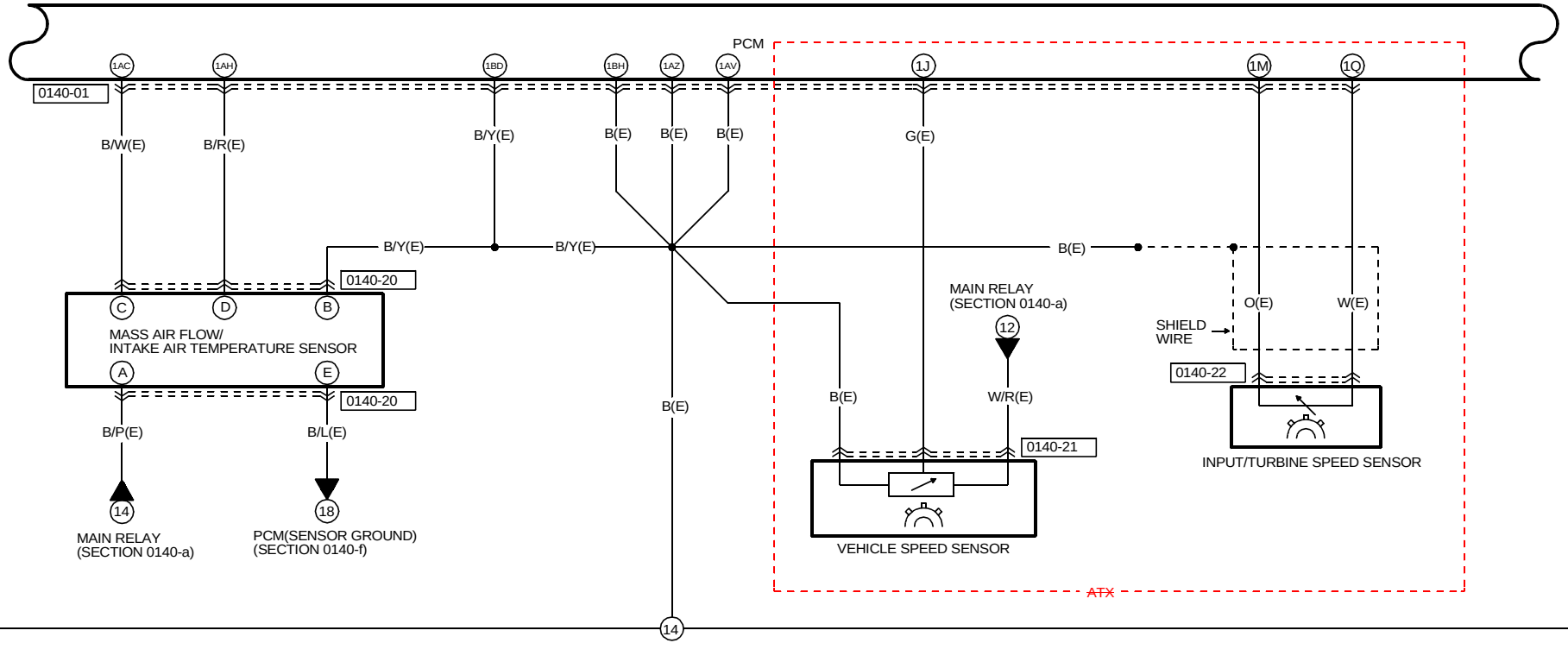

0140-01
PCM(E)

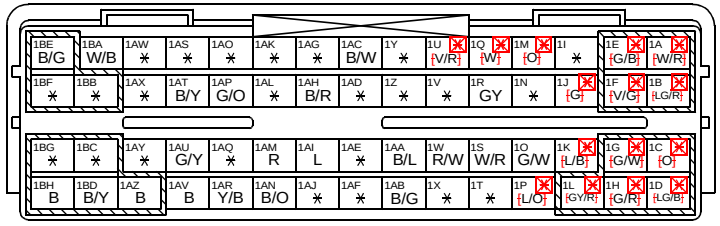

0140-20
MASS AIR FLOW/INTAKE AIR TEMPERATURE SENSOR(E)

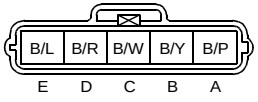

0140-21
VEHICLE SPEED SENSOR(E)

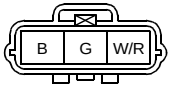

~~(ATX)~~

0140-22
INPUT/TURBINE SPEED SENSOR(E)

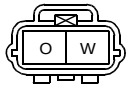

~~(ATX)~~

cardiagn.com

HARNESS SYMBOL : (F) (E) (R)

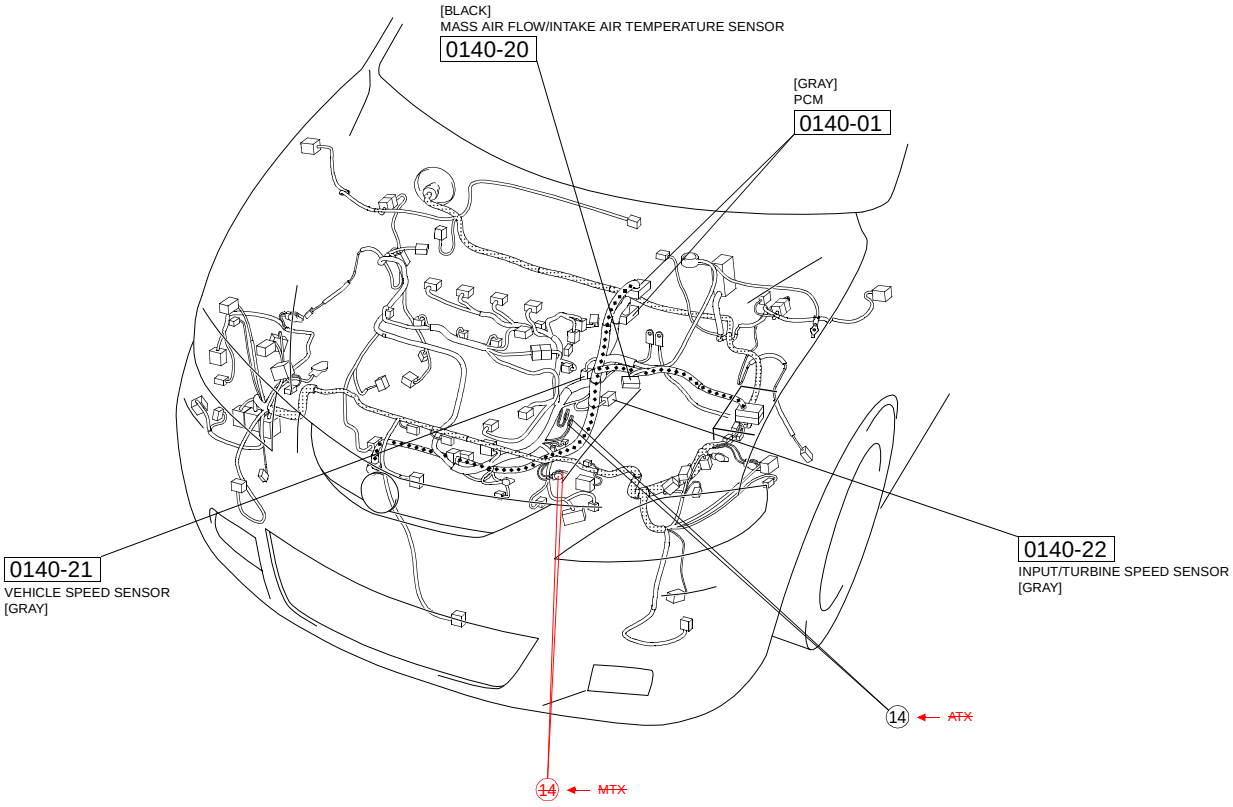

cardiagn.com

CONTROL SYSTEM (INCLUDES AUTOMATIC TRANSAXLE CONTROL INFORMATION)

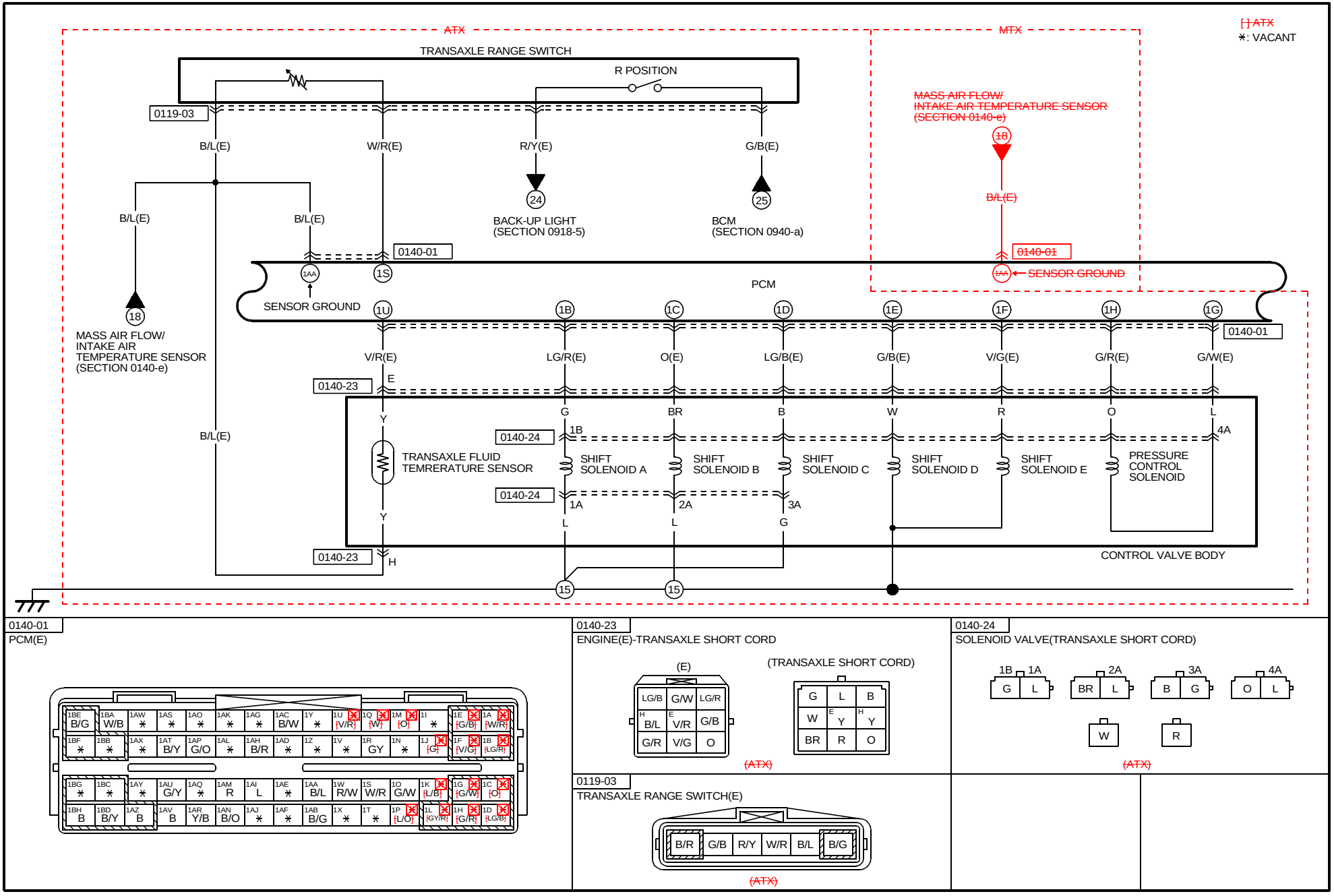

0140-01
PCM(E)

0140-23
ENGINEE(E)-TRANSAXLE SHORT CORD

~~(ATX)~~

0140-24
SOLENOID VALVE(TRANSAXLE SHORT CORD)

~~(ATX)~~

0119-03
TRANSAXLE RANGE SWITCH(E)

~~(ATX)~~

cardiagn.com

HARNESS SYMBOL : (F) (E) (R)

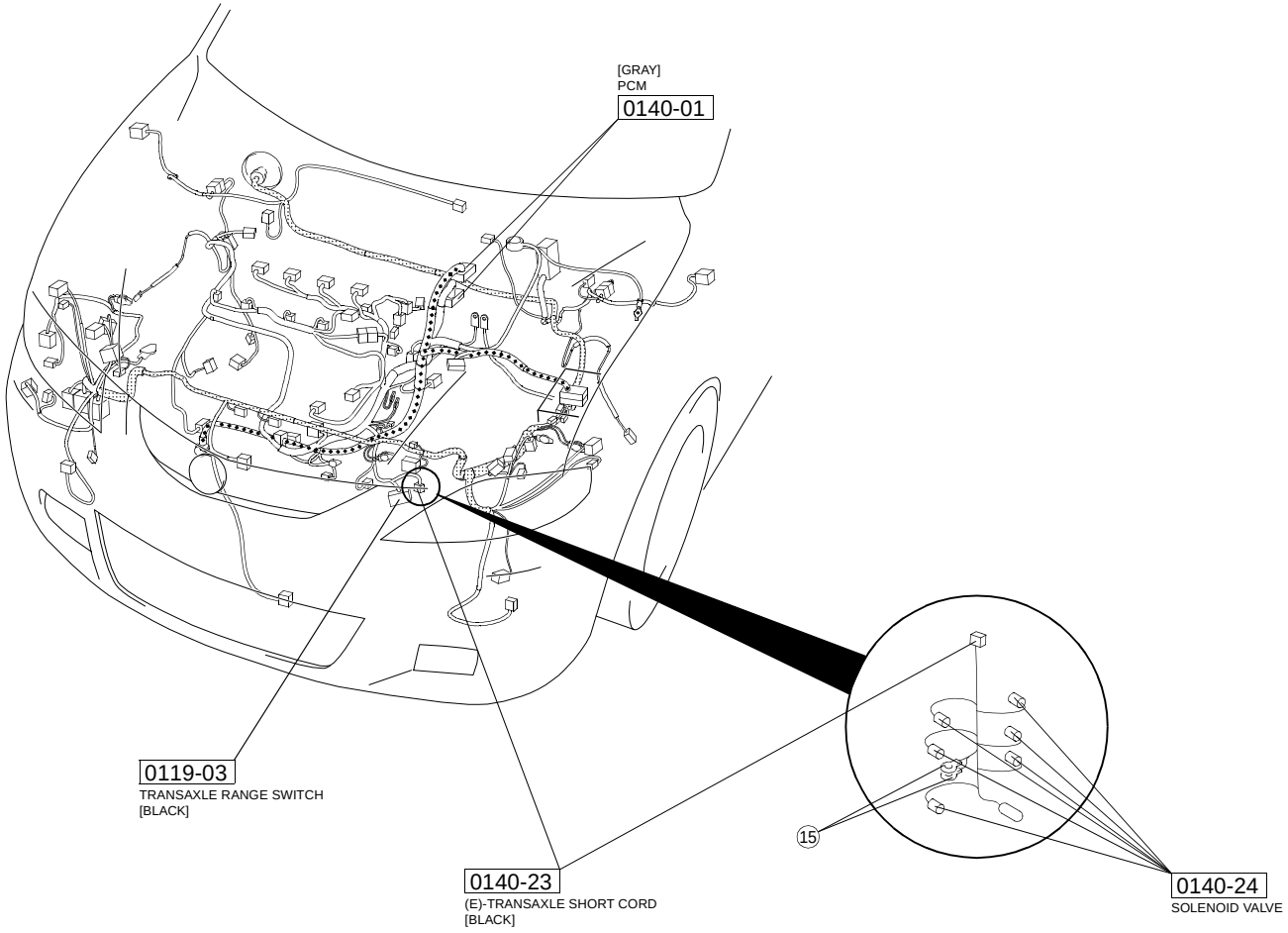

cardiagn.com

CONTROL SYSTEM (INCLUDES AUTOMATIC TRANSAXLE CONTROL INFORMATION)

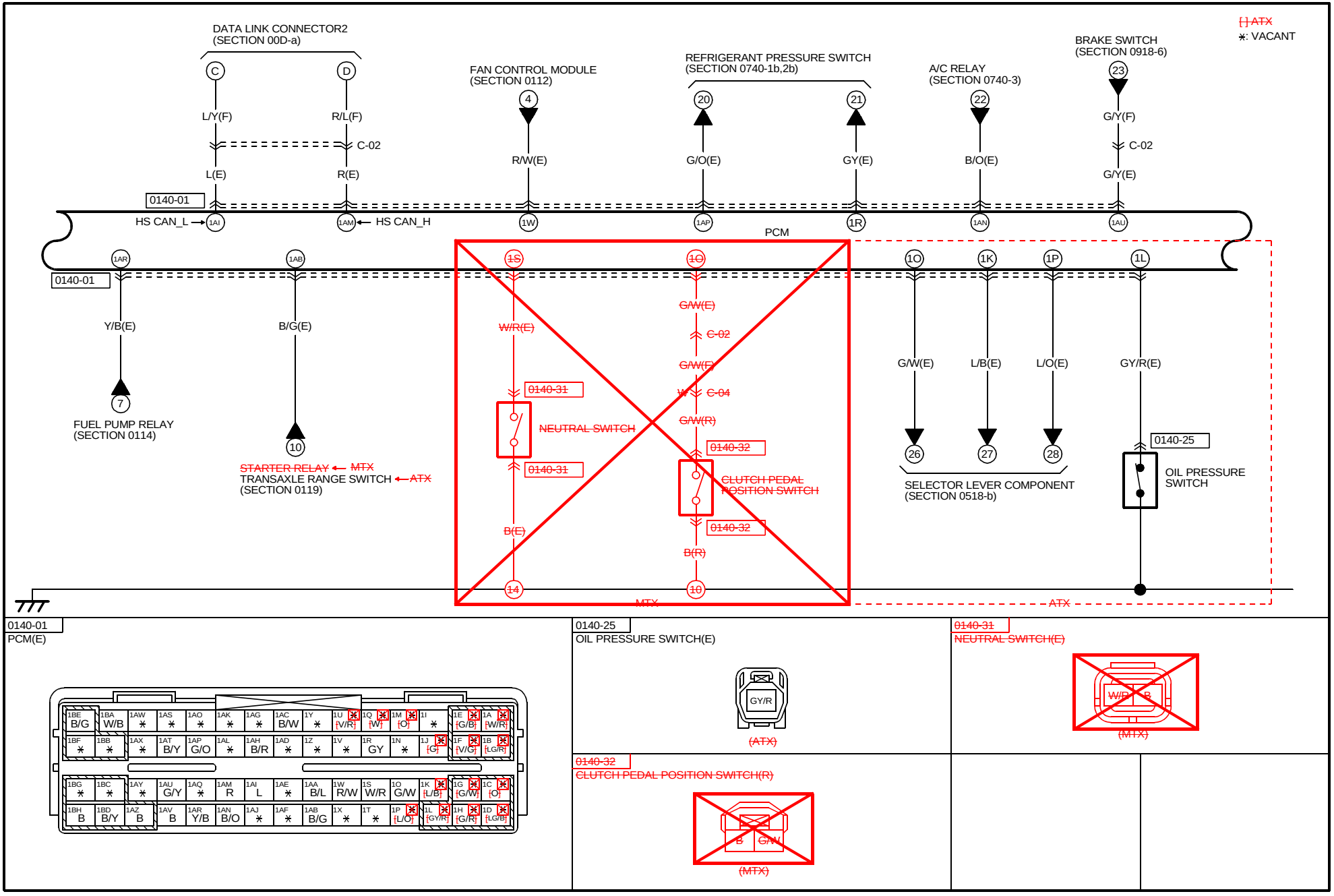

cardiagn.com

HARNESS SYMBOL : (F) (E) (R)

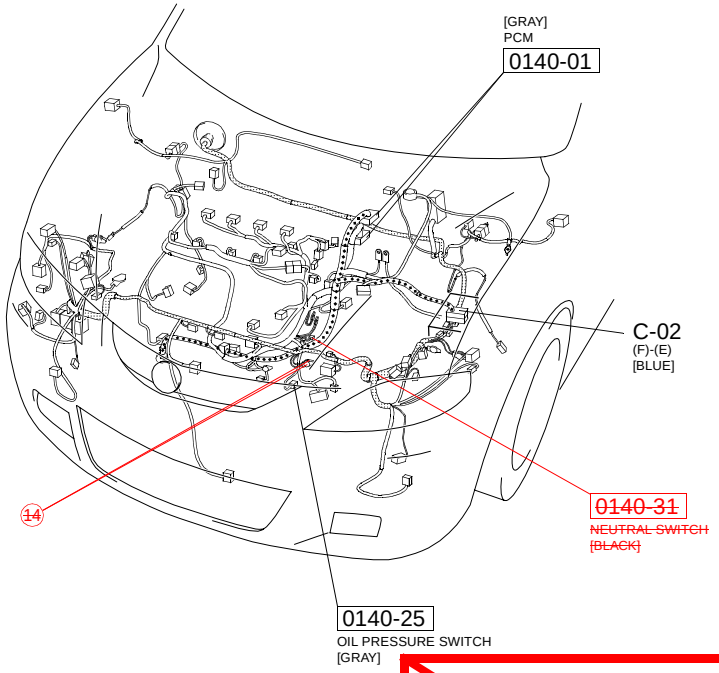

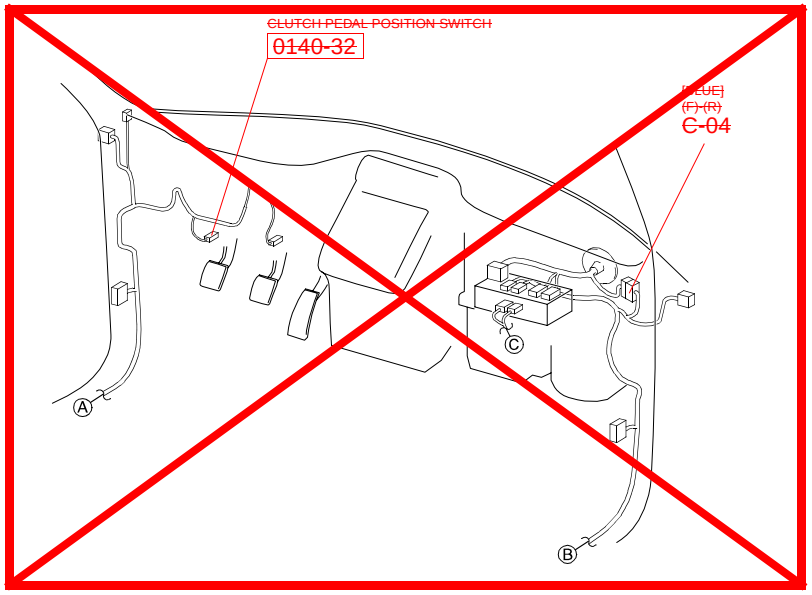

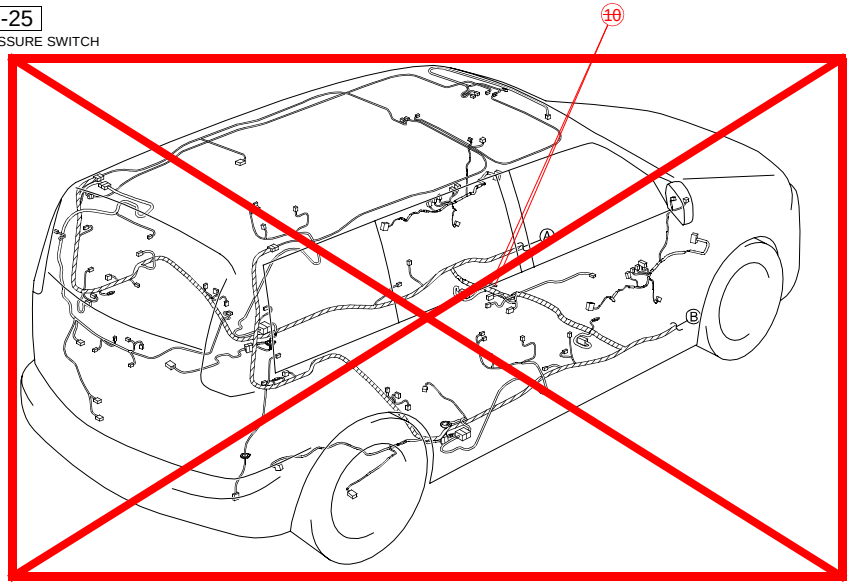

cardiagn.com

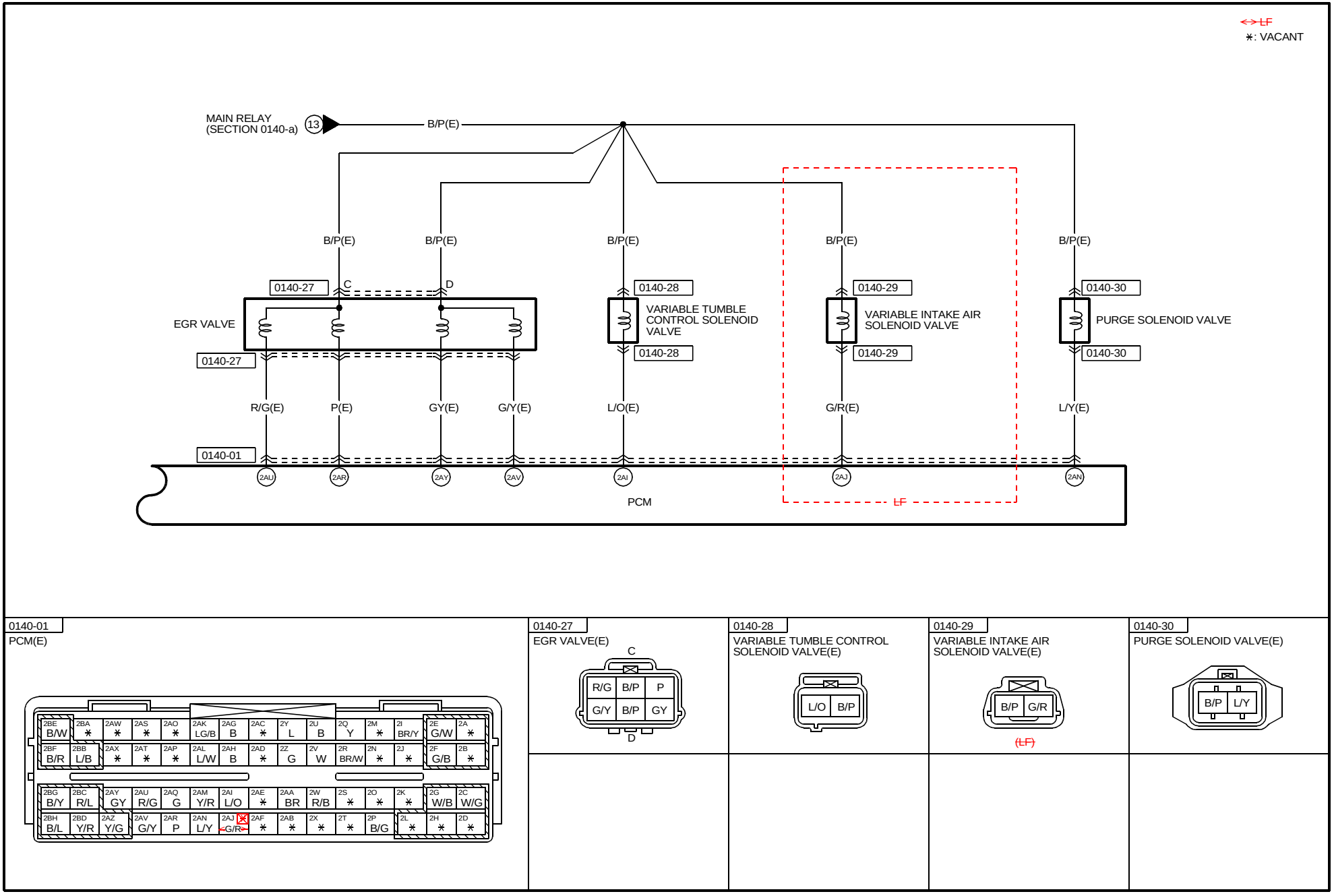

cardiagn.com

HARNESS SYMBOL : (F) (E) (R)

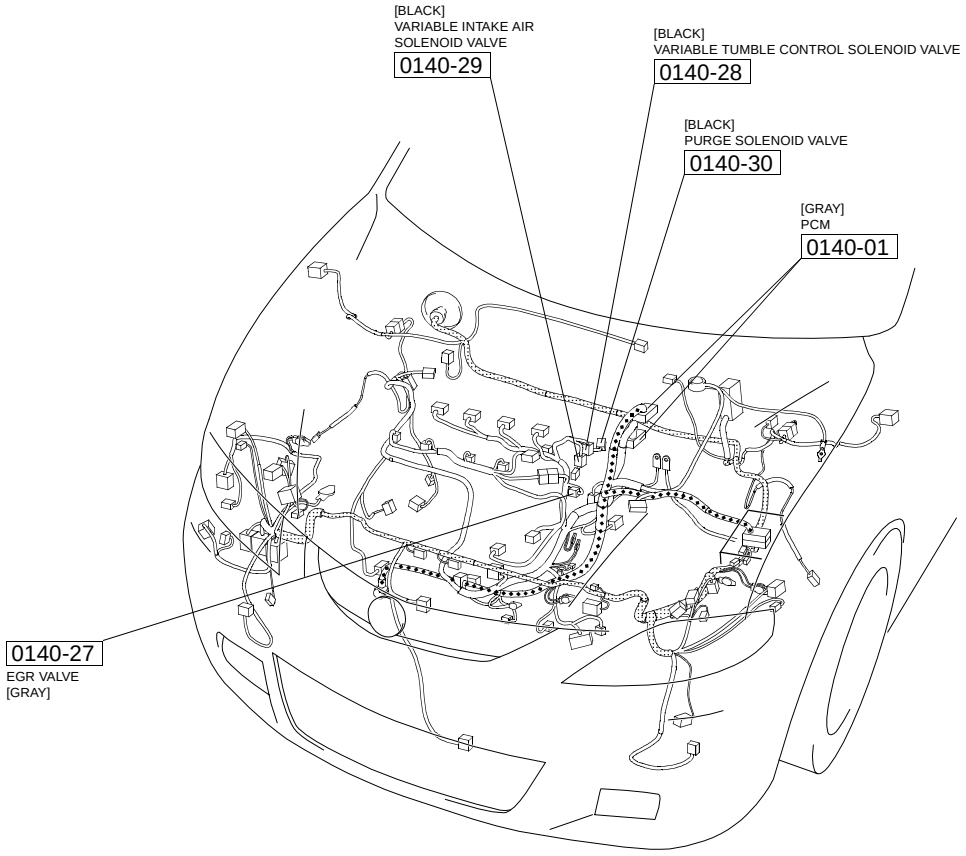

cardiagn.com

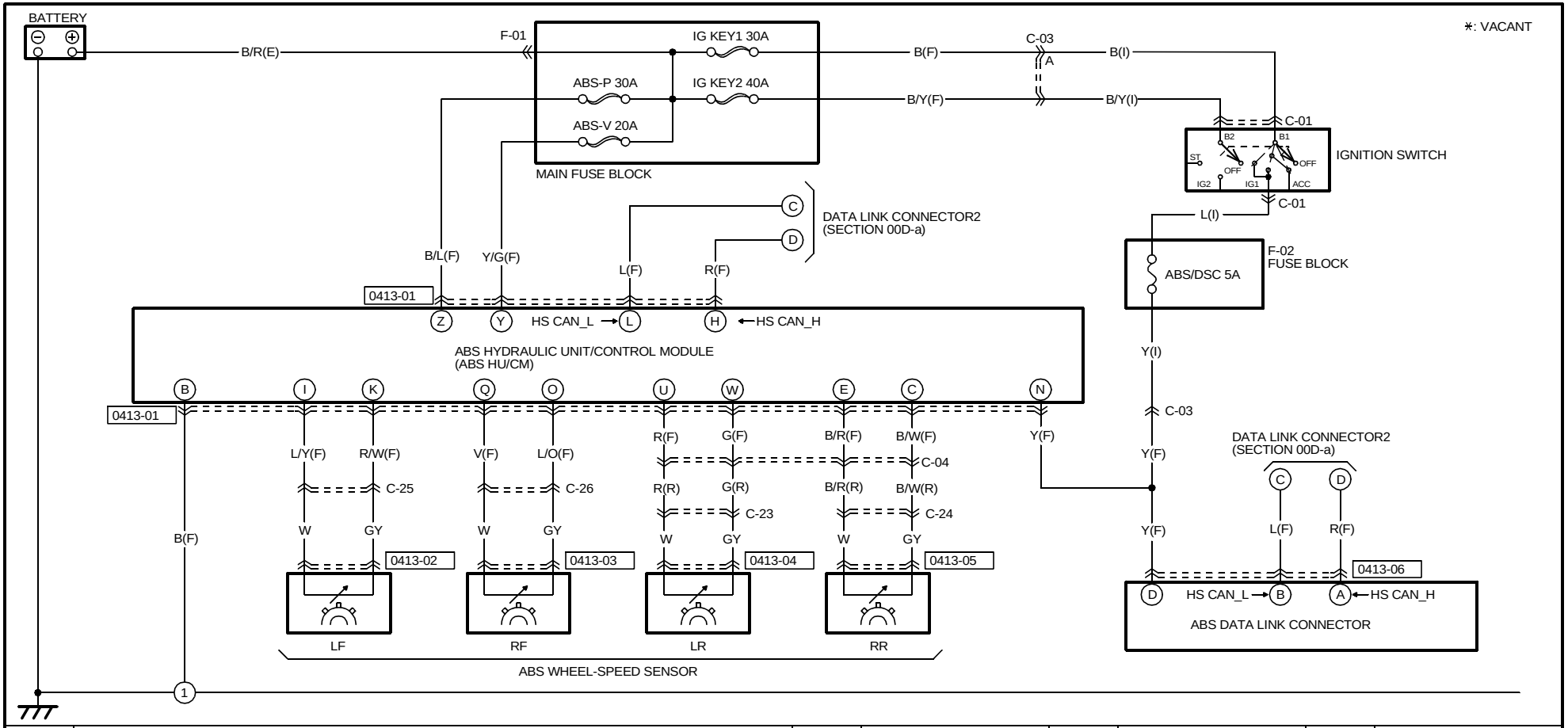

0413-01
ABS HU/CM(F)

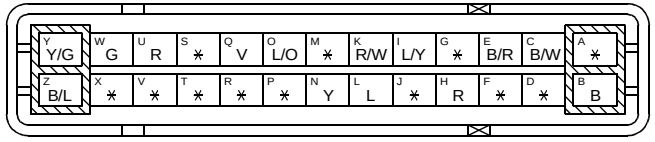

0413-02
ABS WHEEL-SPEED SENSOR LF
(SHORT CORD)

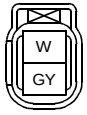

0413-03
ABS WHEEL-SPEED SENSOR RF
(SHORT CORD)

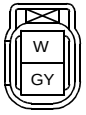

0413-04
ABS WHEEL-SPEED SENSOR LR
(SHORT CORD)

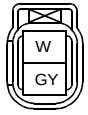

0413-05
ABS WHEEL-SPEED SENSOR RR
(SHORT CORD)

0413-06
ABS DATA LINK CONNECTOR(F)

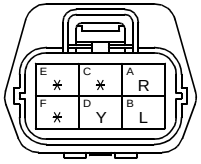

cardiagn.com

HARNESS SYMBOL : (F) (E) (R)

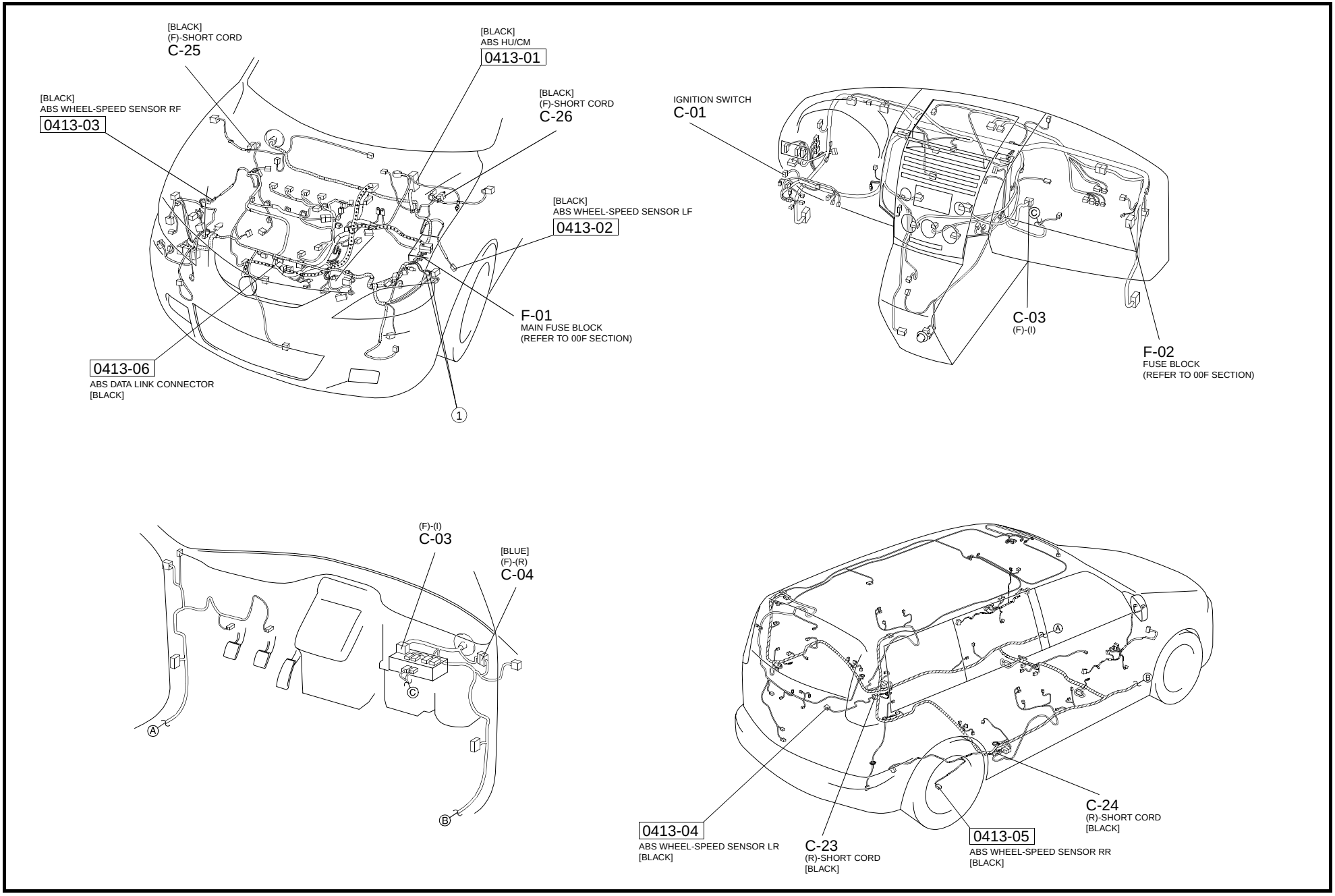

cardiagn.com

DYNAMIC STABILITY CONTROL (DSC)

0415-a

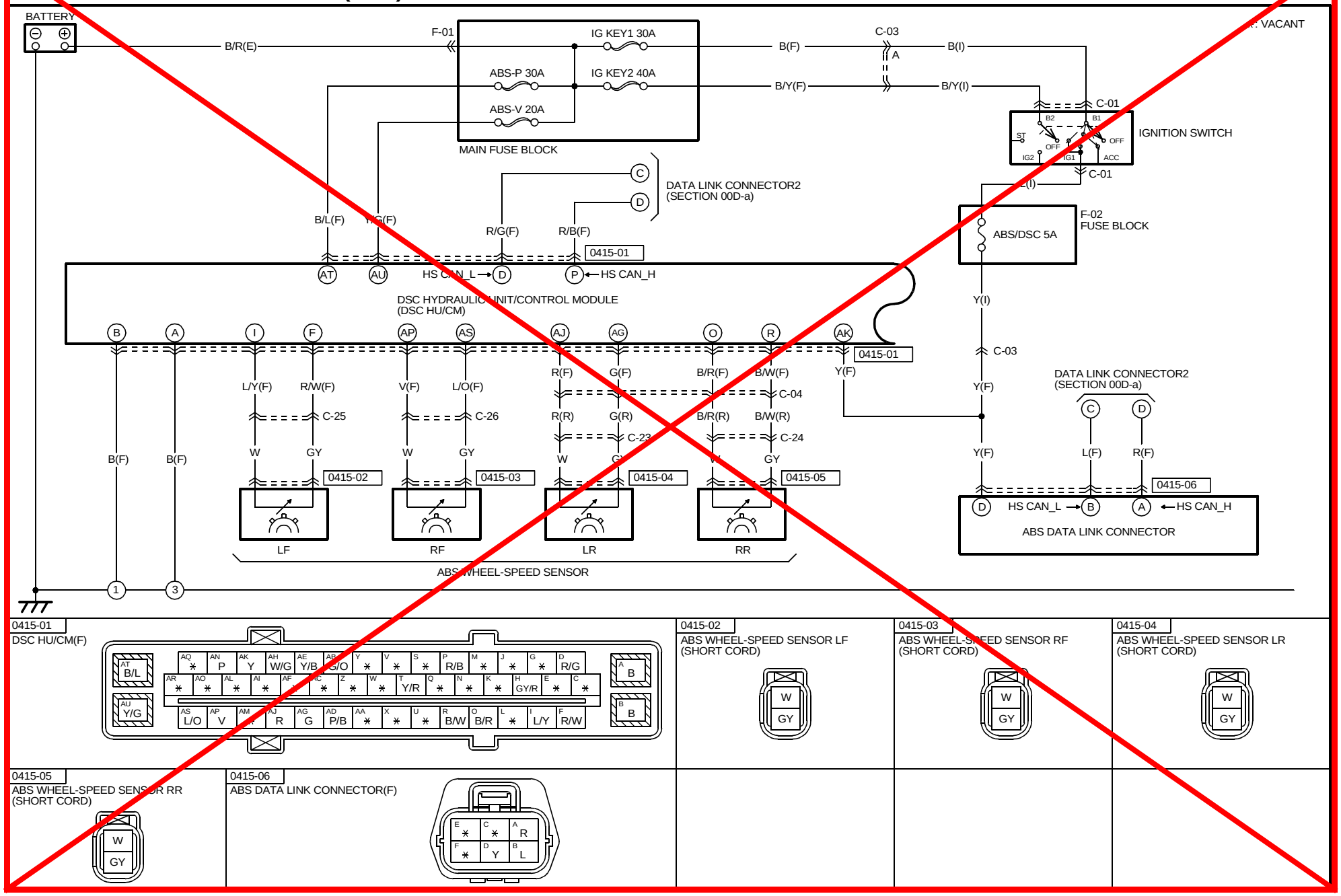

cardiagn.com

HARNESS SYMBOL : (F) (E) (R)

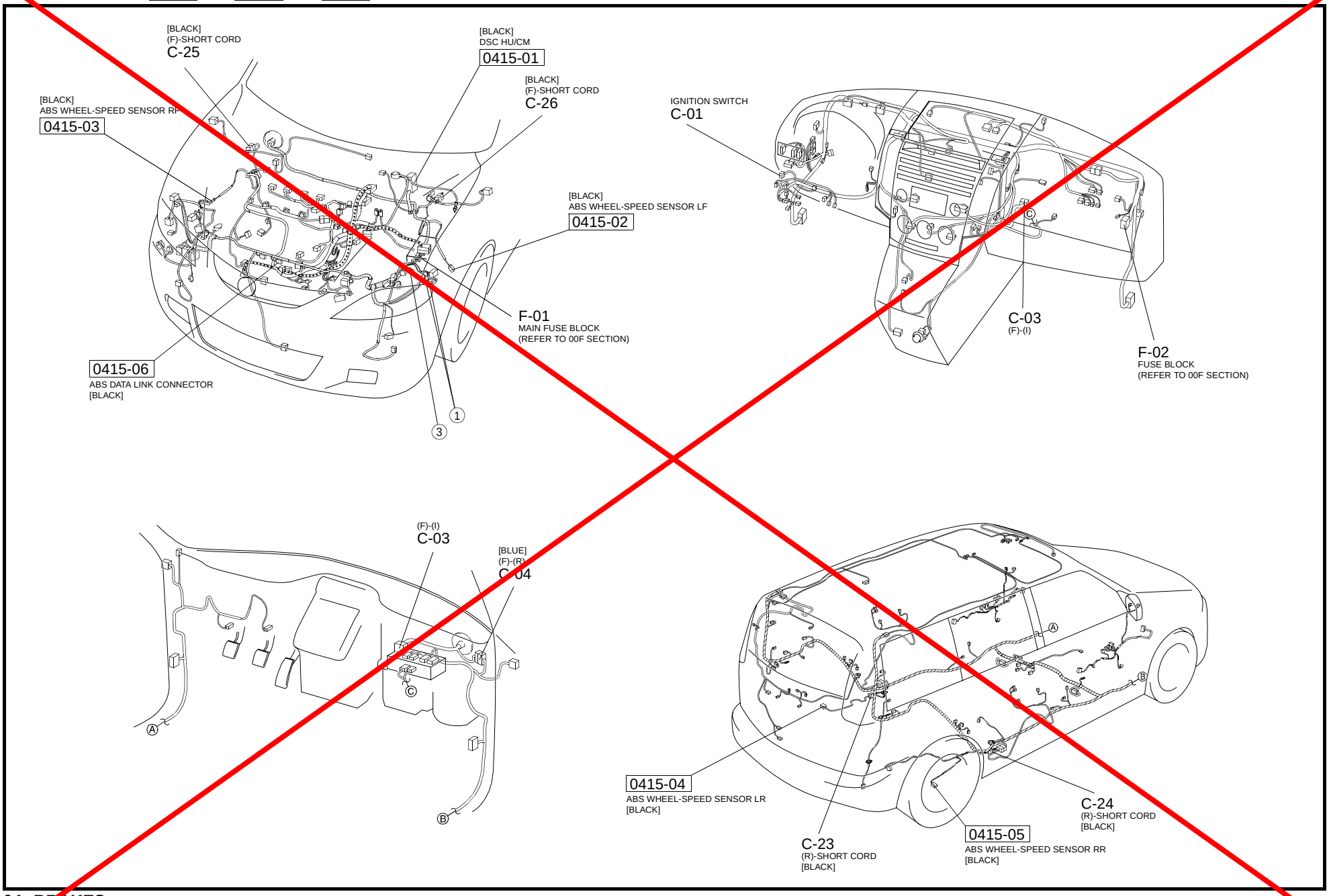

cardiagn.com

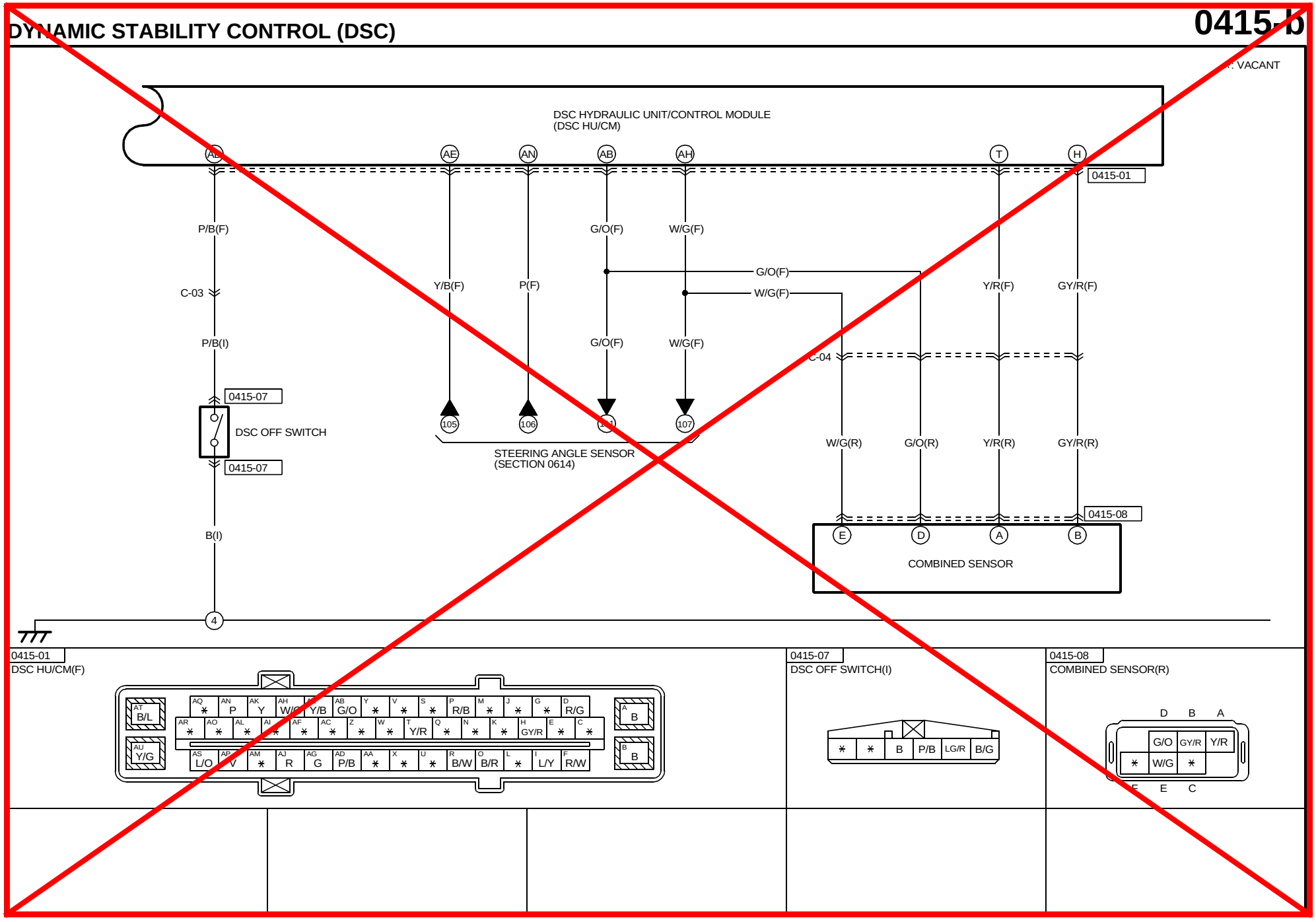

cardiagn.com

HARNESS SYMBOL : (F) (E) (R)

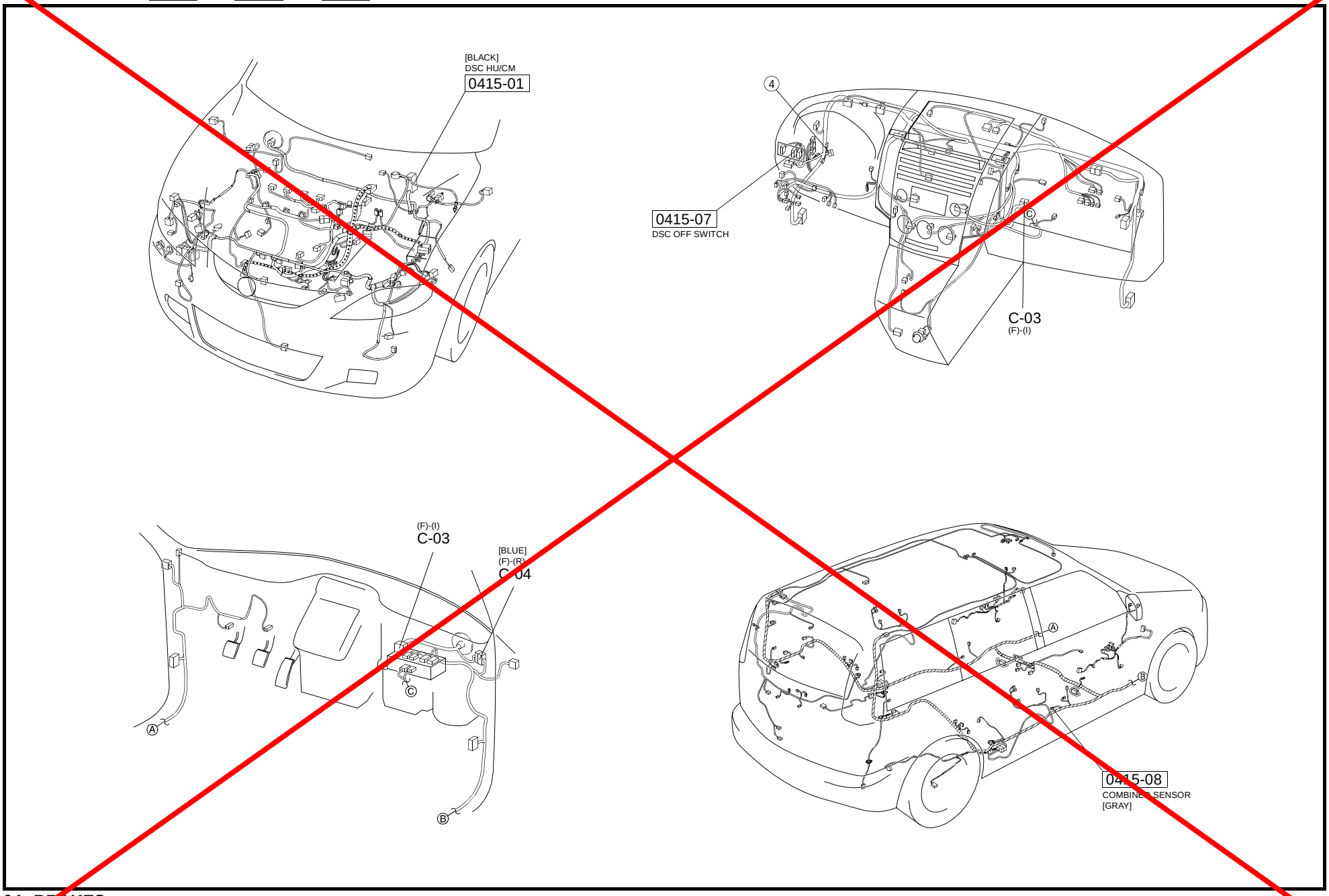

cardiagn.com

KEY INTERLOCK SYSTEM/SHIFT-LOCK SYSTEM

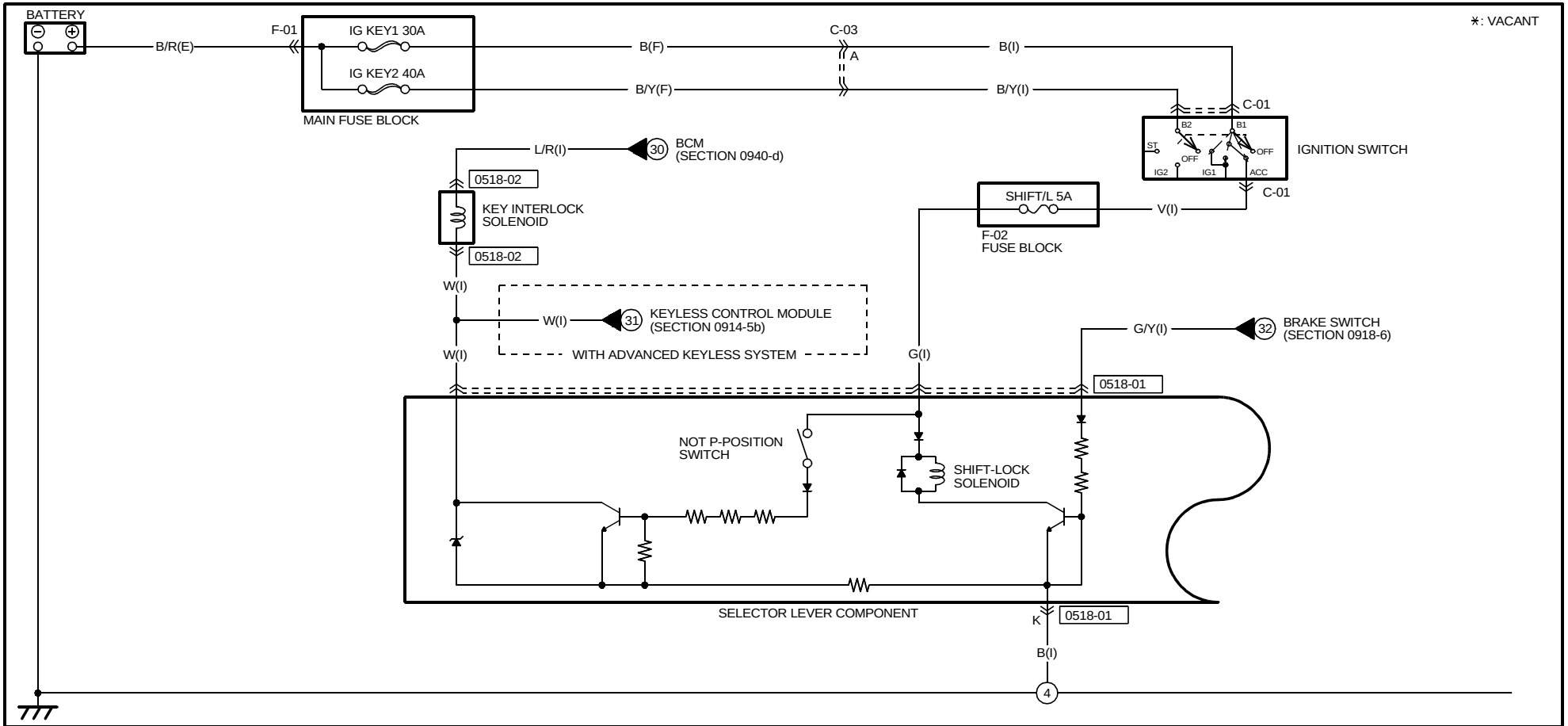

0518-01

SELECTOR LEVER COMPONENT(I)

B	G	W	G/Y	L/O	G/W
B/P	LG/B	B	*	*	L/B

K H

0518-02

KEY INTERLOCK SOLENOID(I)

W	L/R

cardiagn.com

HARNESS SYMBOL : (F) (E) (R)

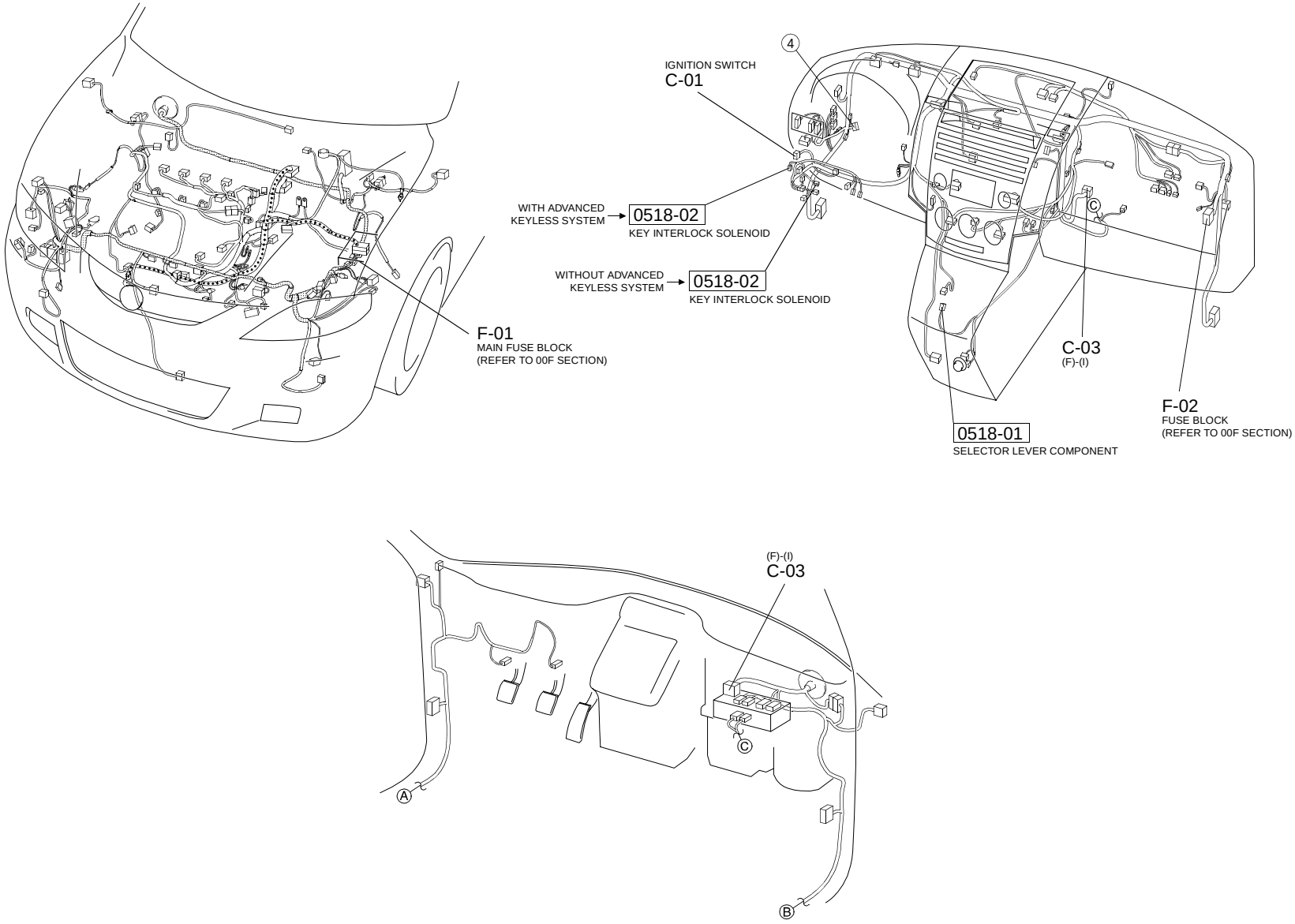

cardiagn.com

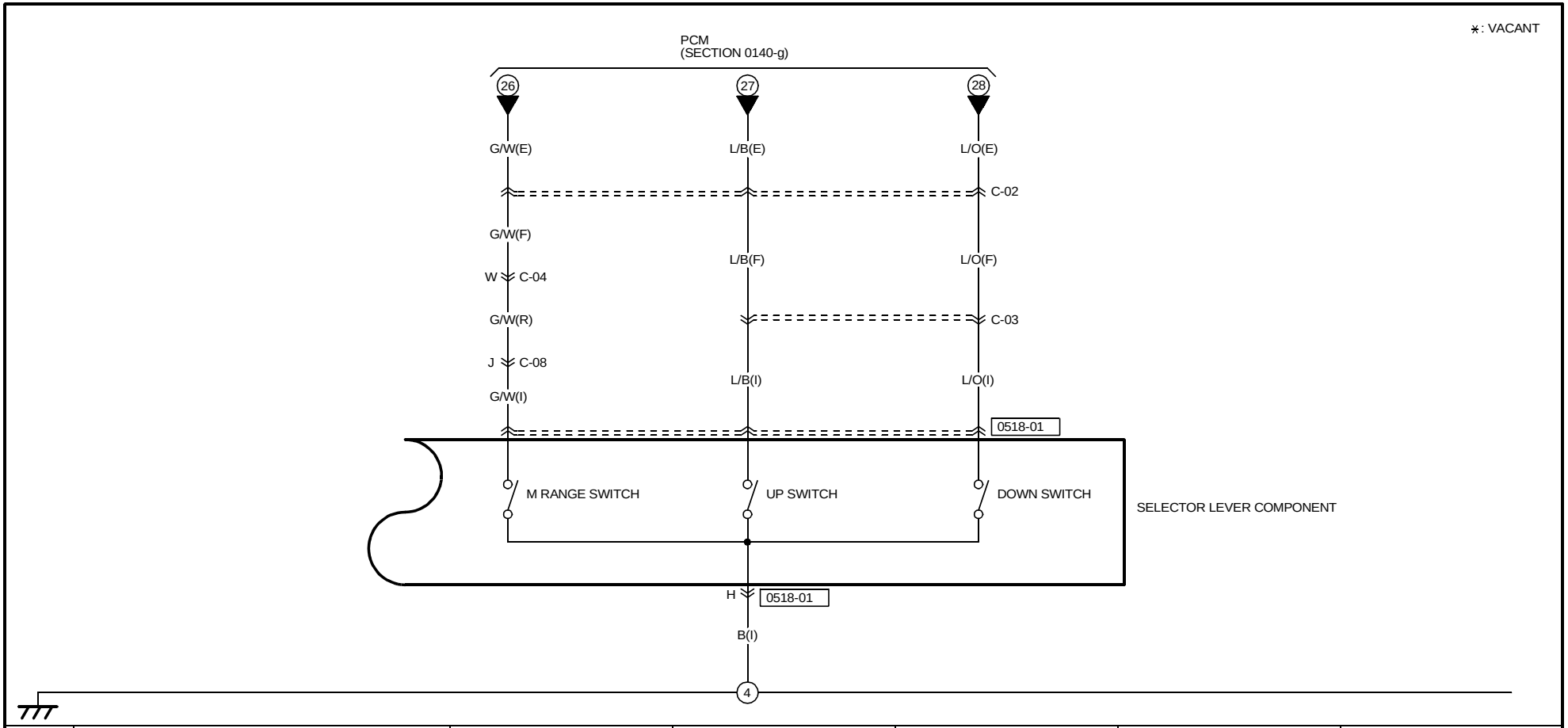

0518-01

SELECTOR LEVER COMPONENT(I)

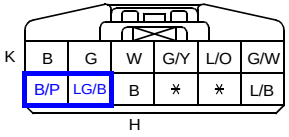

cardiagn.com

HARNESS SYMBOL : (F) (E) (R)

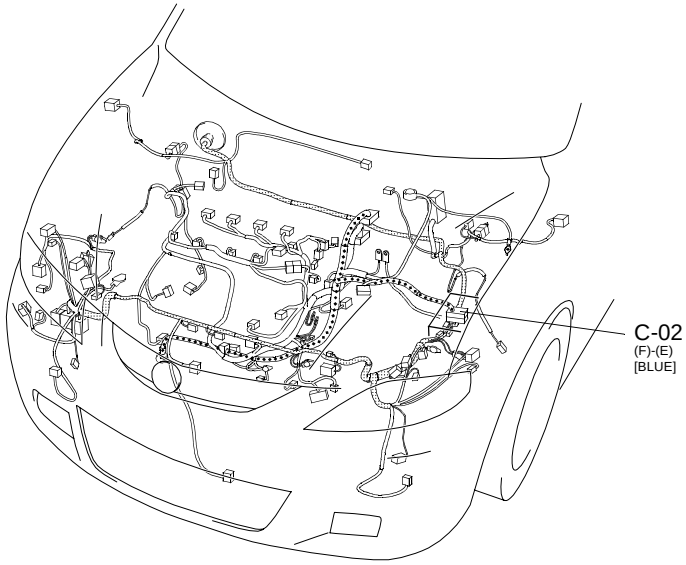

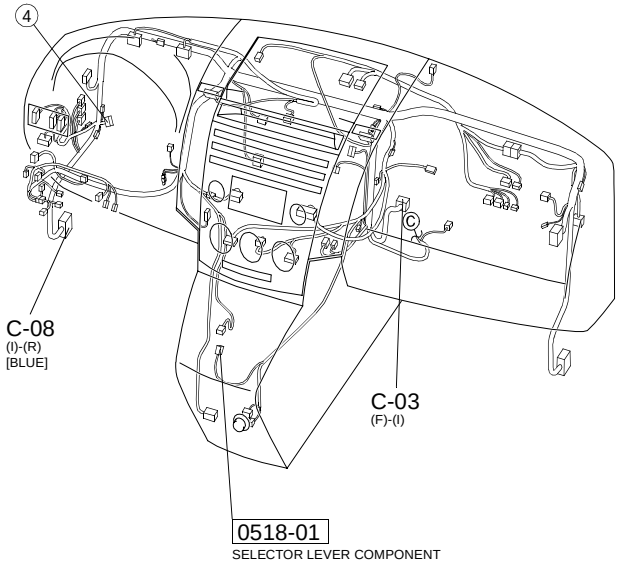

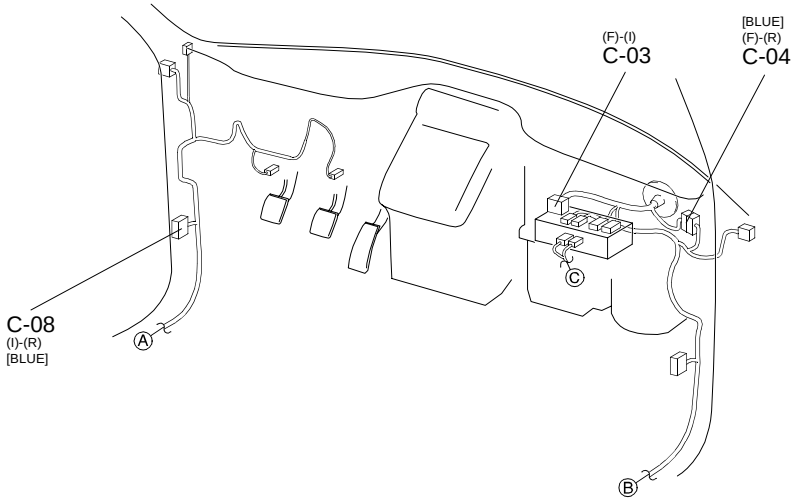

cardiagn.com

ELECTRO HYDRAULIC POWER ASSIST STEERING (EHPAS) SYSTEM

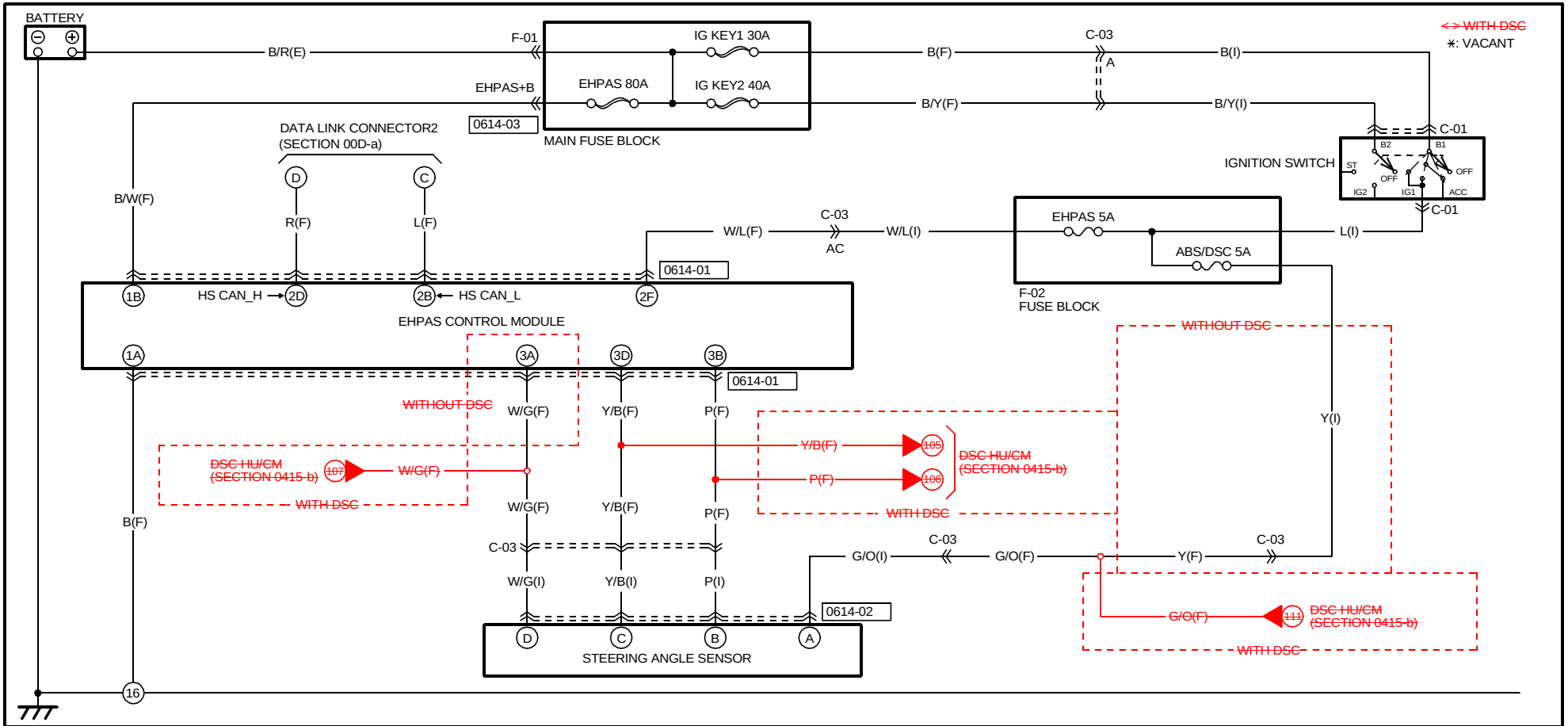

0614-01			0614-02	0614-03		
EHPAS CONTROL MODULE(F)			STEERING ANGLE SENSOR(I)	EHPAS+B(F)		
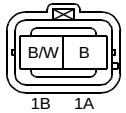	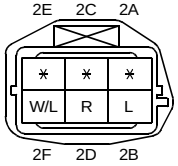	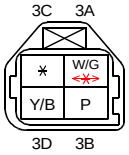	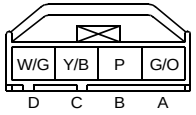			

cardiagn.com

HARNESS SYMBOL : (F) (E) (R)

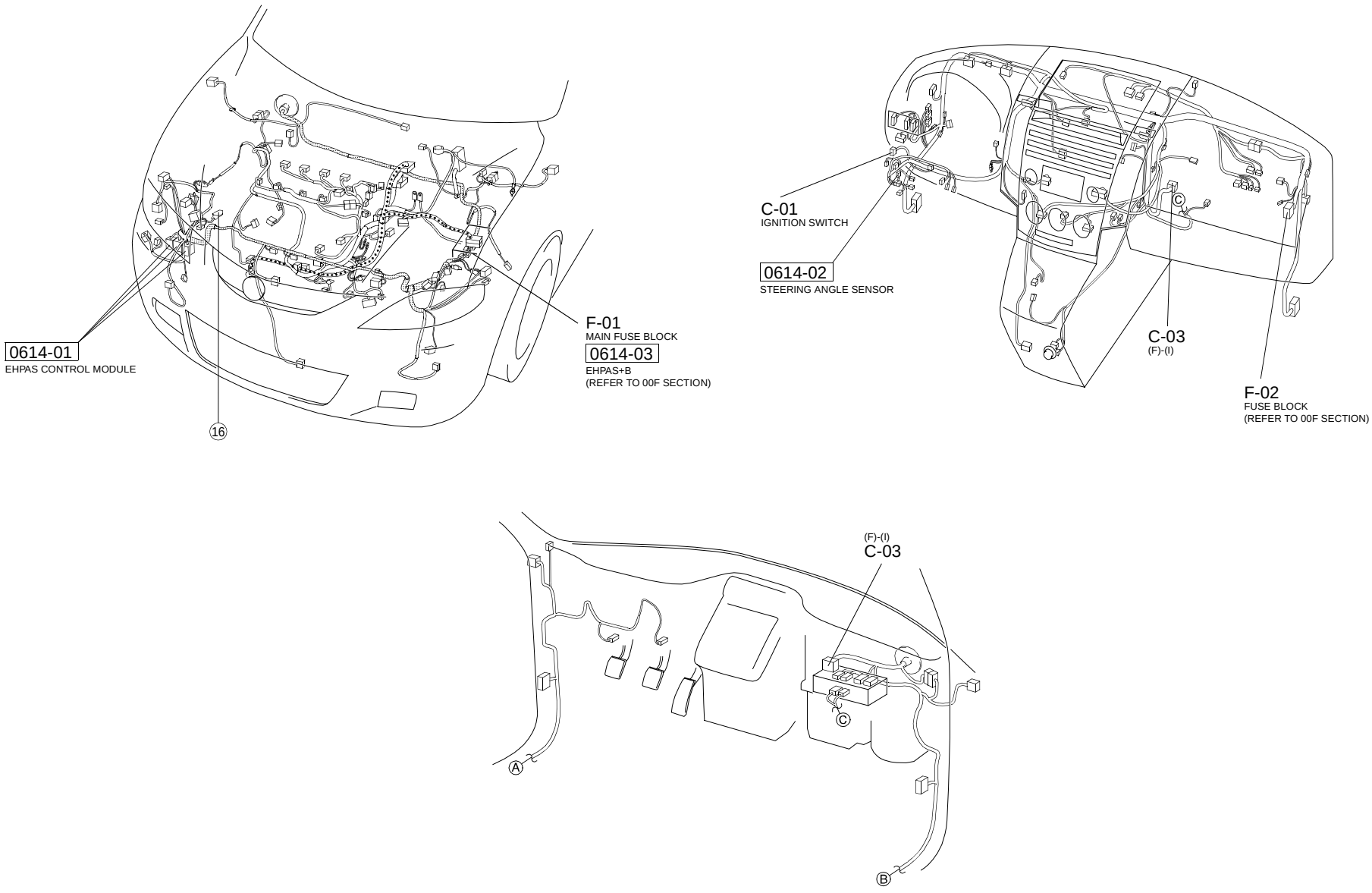

cardiagn.com

HEATER AND AIR CONDITIONER SYSTEM (AUTO A/C)

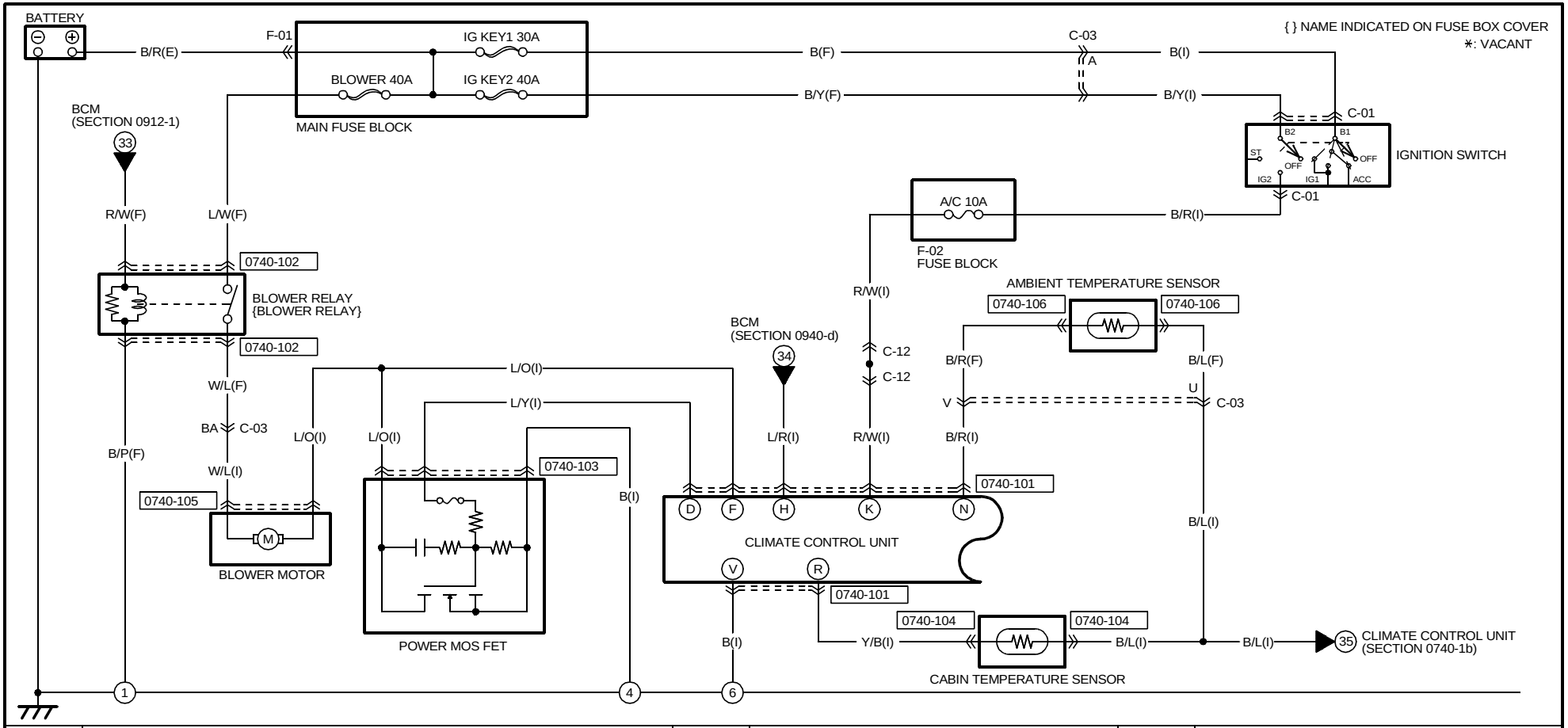

0740-101
CLIMATE CONTROL UNIT(I)

	W	U	S	Q	O	M K	I	G	E	C	A
	GY	B/L	LG/W	P/B	LG	V/W	R/W	B/W	L	Y	BR/R	LG/R
	L/W	B	L/B	Y/B	V	B/R	W/L	W/R	L/R	L/O	L/Y	B/P
	X	V	T	R	P	N	L	J	H	F	D	B

0740-102
BLOWER RELAY(F)

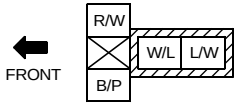

NOTE:SEEN FROM TERMINAL SIDE

0740-103
POWER MOS FET(I)

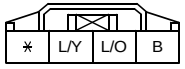

0740-104
CABIN TEMPERATURE SENSOR(I)

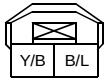

0740-105
BLOWER MOTOR(I)

0740-106
AMBIENT TEMPERATURE SENSOR(F)

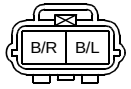

cardiagn.com

HARNESS SYMBOL : (F) (E) (R)

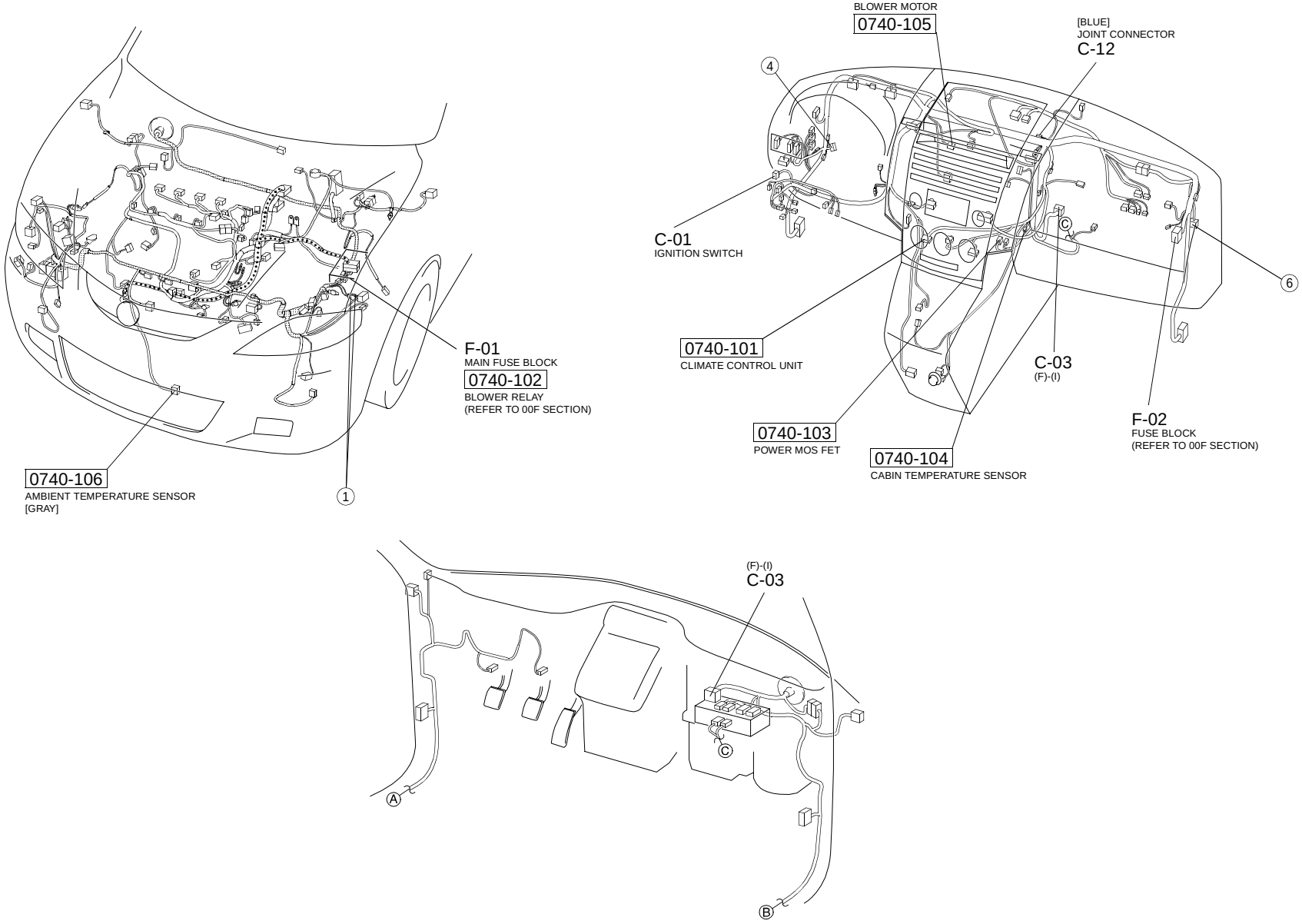

cardiagn.com

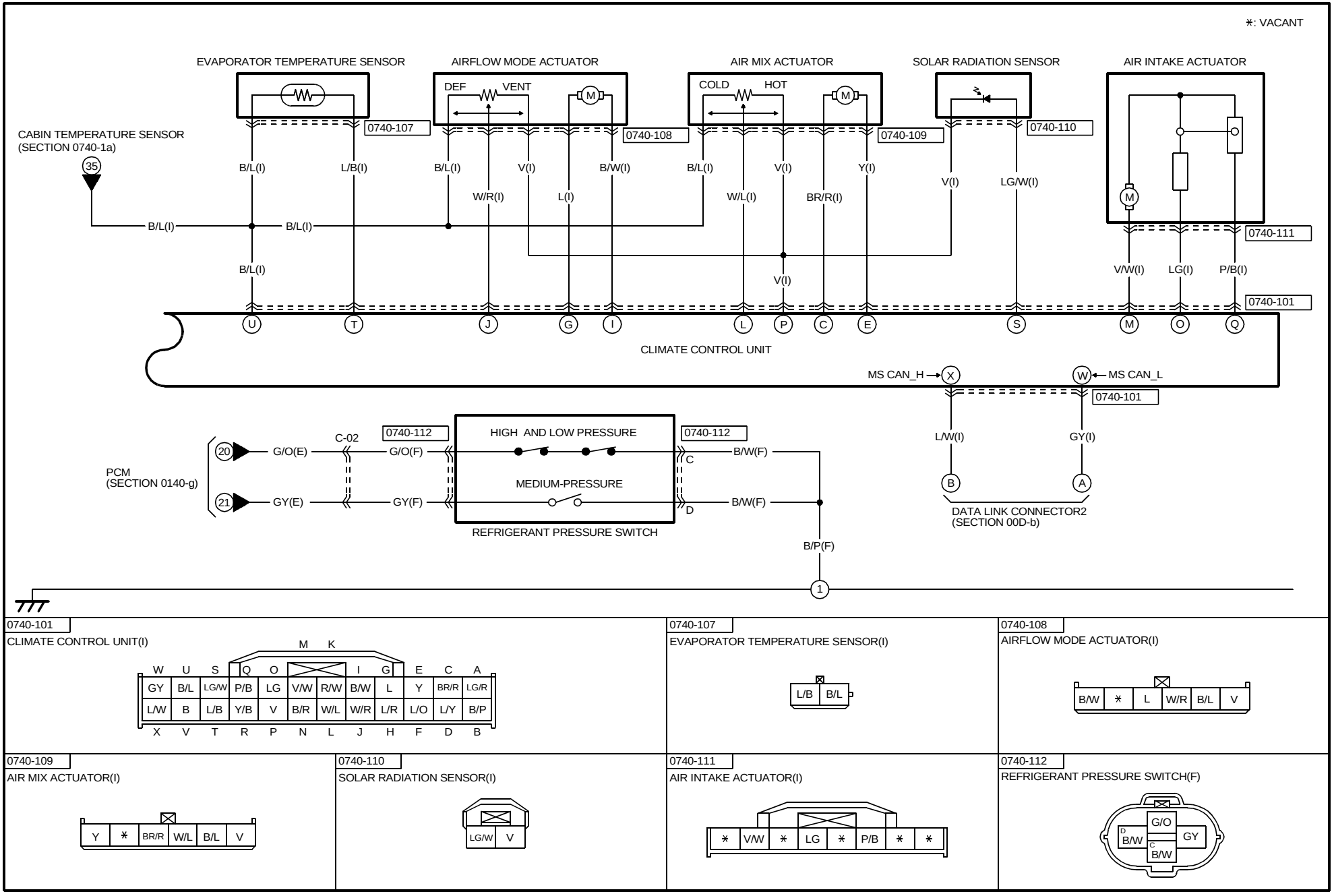

cardiagn.com

HARNESS SYMBOL : (F) (E) (R)

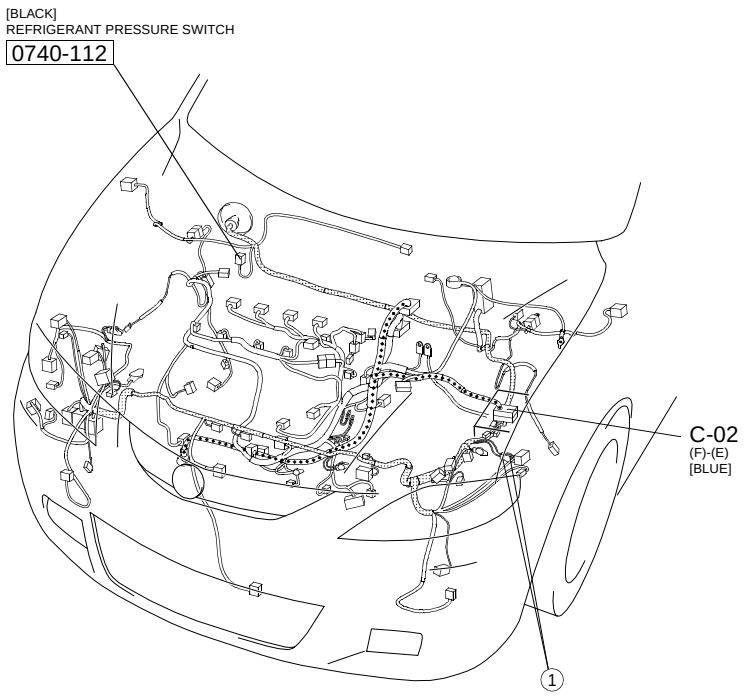

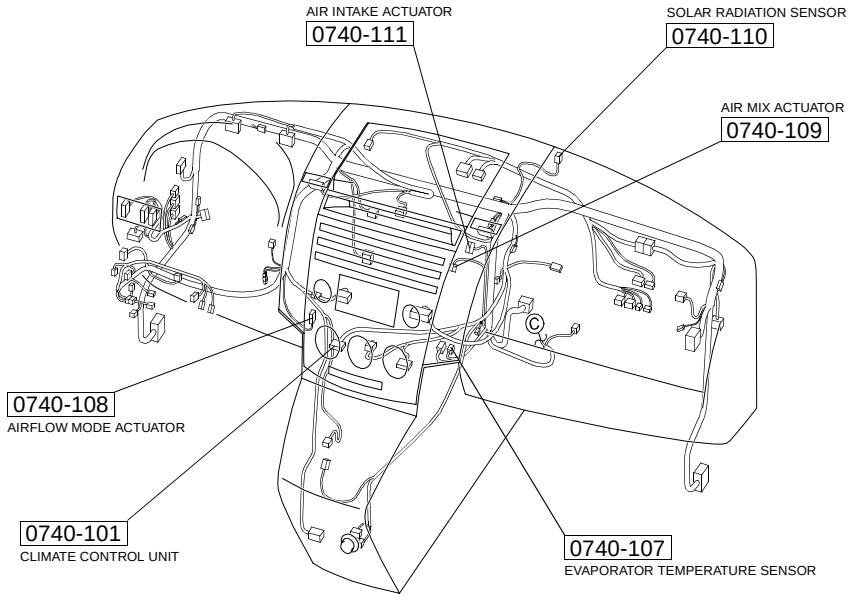

cardiagn.com

HEATER AND AIR CONDITIONER SYSTEM (MANUAL A/C)

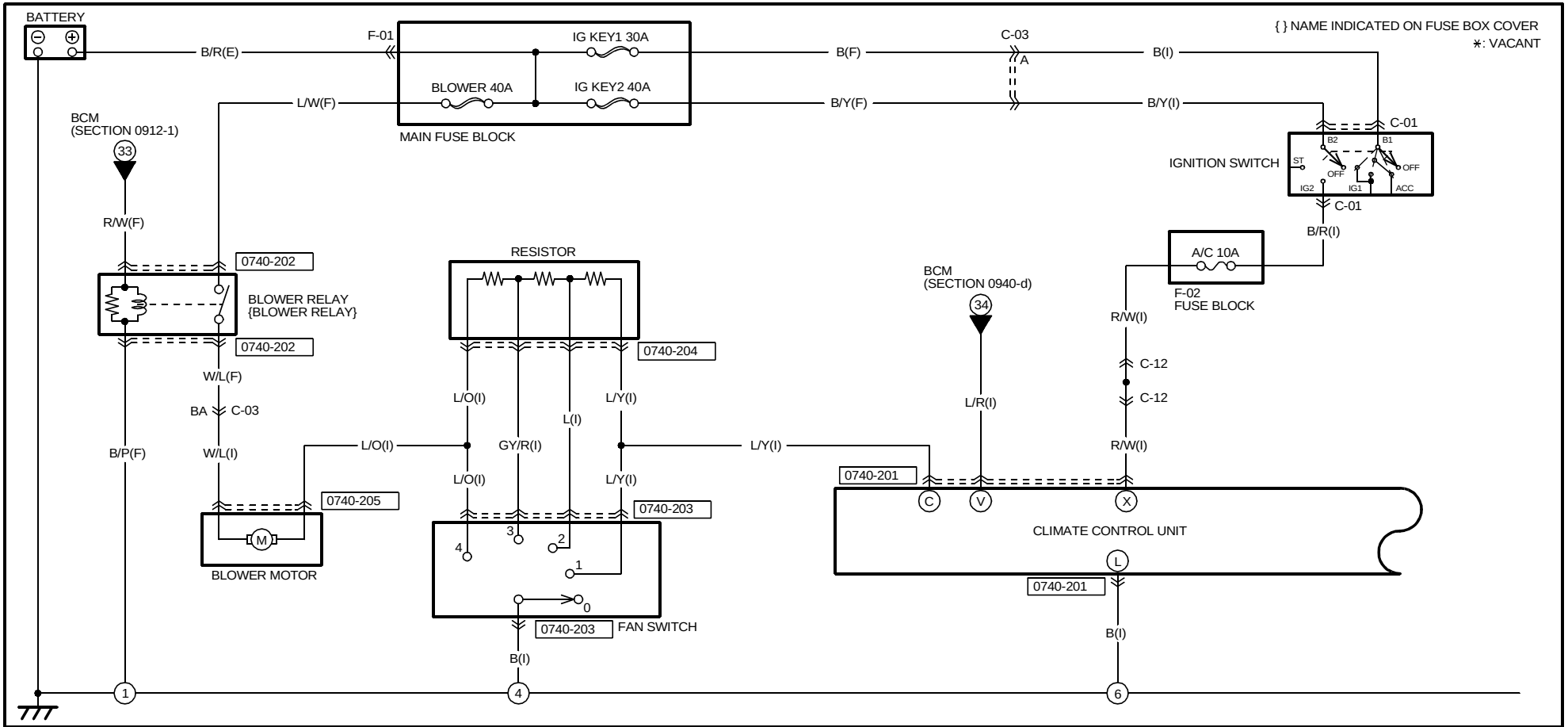

0740-201
CLIMATE CONTROL UNIT(I)

	W	U	S	Q	O	M	K	I	G	E	C	A
	*	*	*	*	*	L/B	B/L	L/W	B/R	GY/R	L/Y	*
	R/W	L/R	V/W	LG	P/B	*	B	*	*	B/P	*	LG/R
	X	V	T	R	P	N	L	J	H	F	D	B

0740-202
BLOWER RELAY(F)

FRONT

R/W		
	W/L	L/W
B/P		

NOTE:SEEN FROM TERMINAL SIDE

0740-203
FAN SWITCH(I)

L	L/Y	B
GY/R	L/O	*

0740-204
RESISTOR(I)

GY/R	L/Y	L	L/O

0740-205
BLOWER MOTOR(I)

W/L
L/O

cardiagn.com

HARNESS SYMBOL : (F) (E) (R)

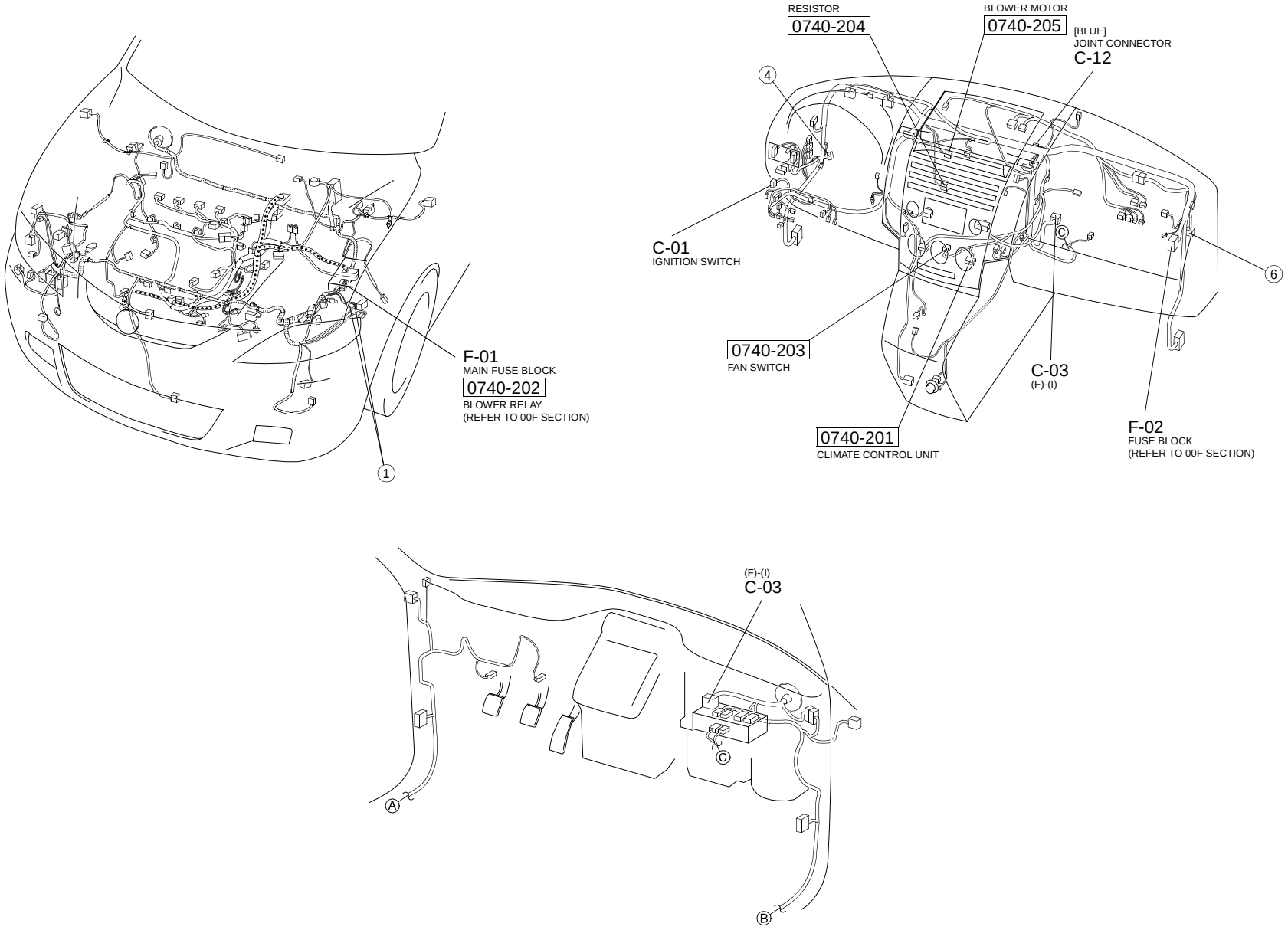

cardiagn.com

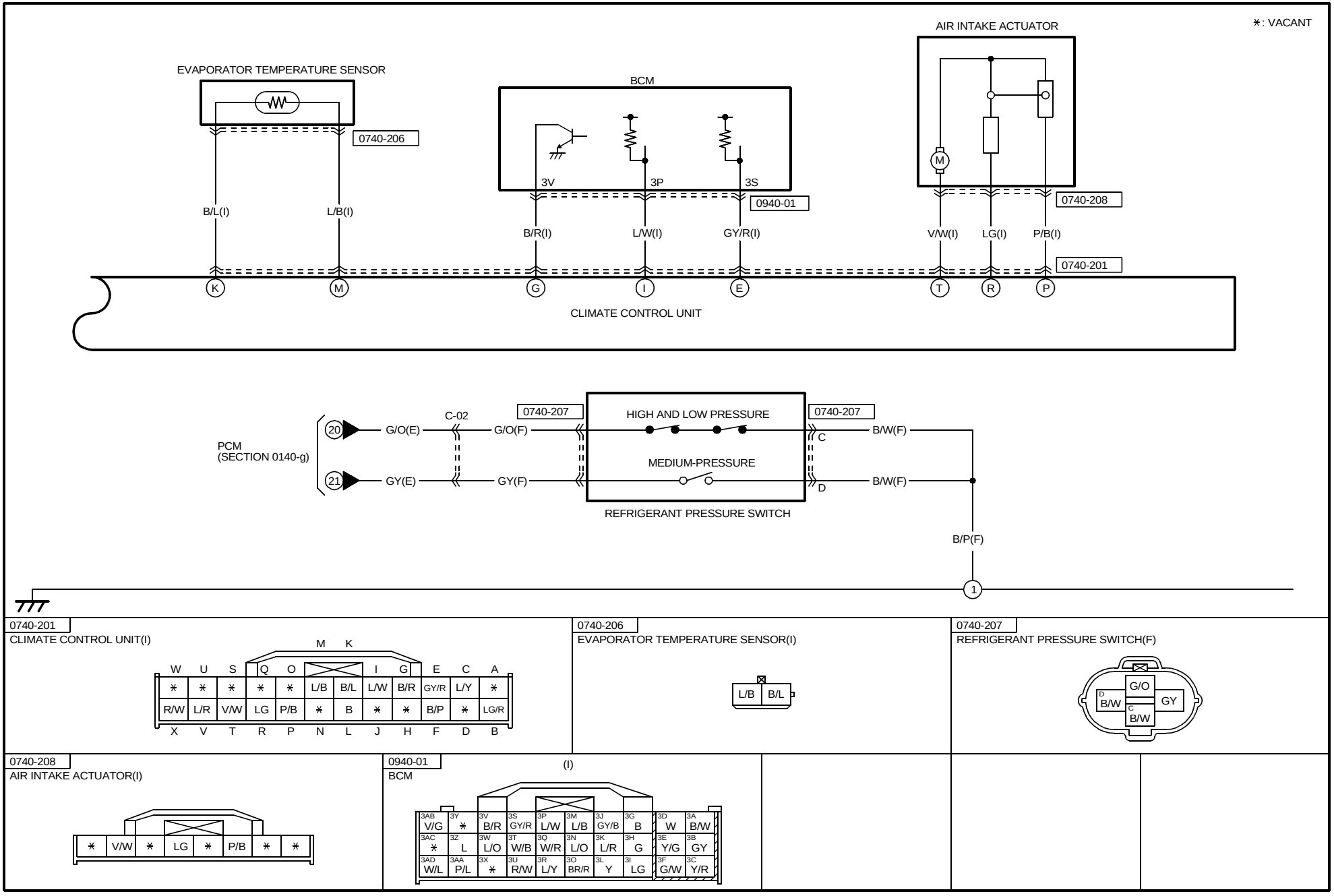

cardiagn.com

HARNESS SYMBOL : (F) (E) (R)

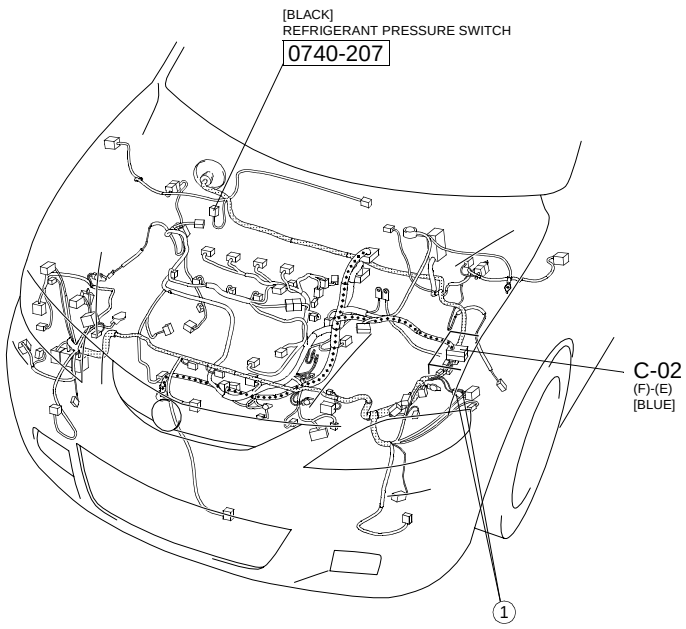

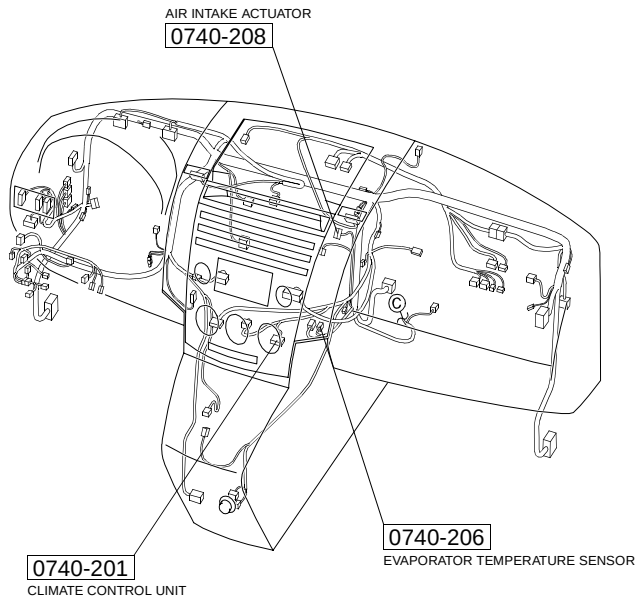

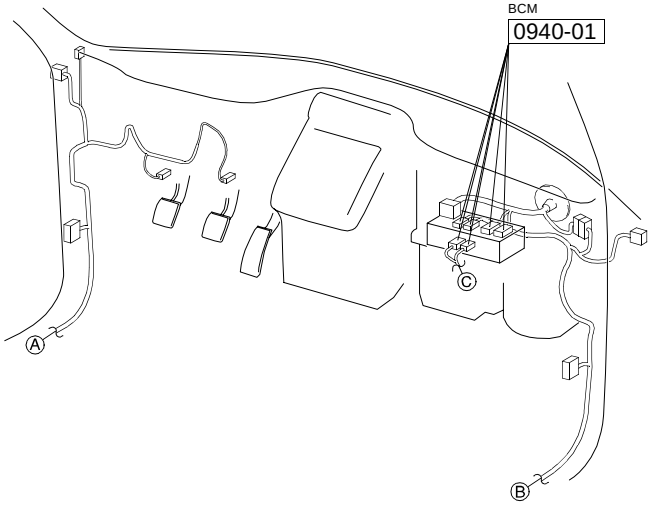

cardiagn.com

A/C COMPRESSOR CONTROL

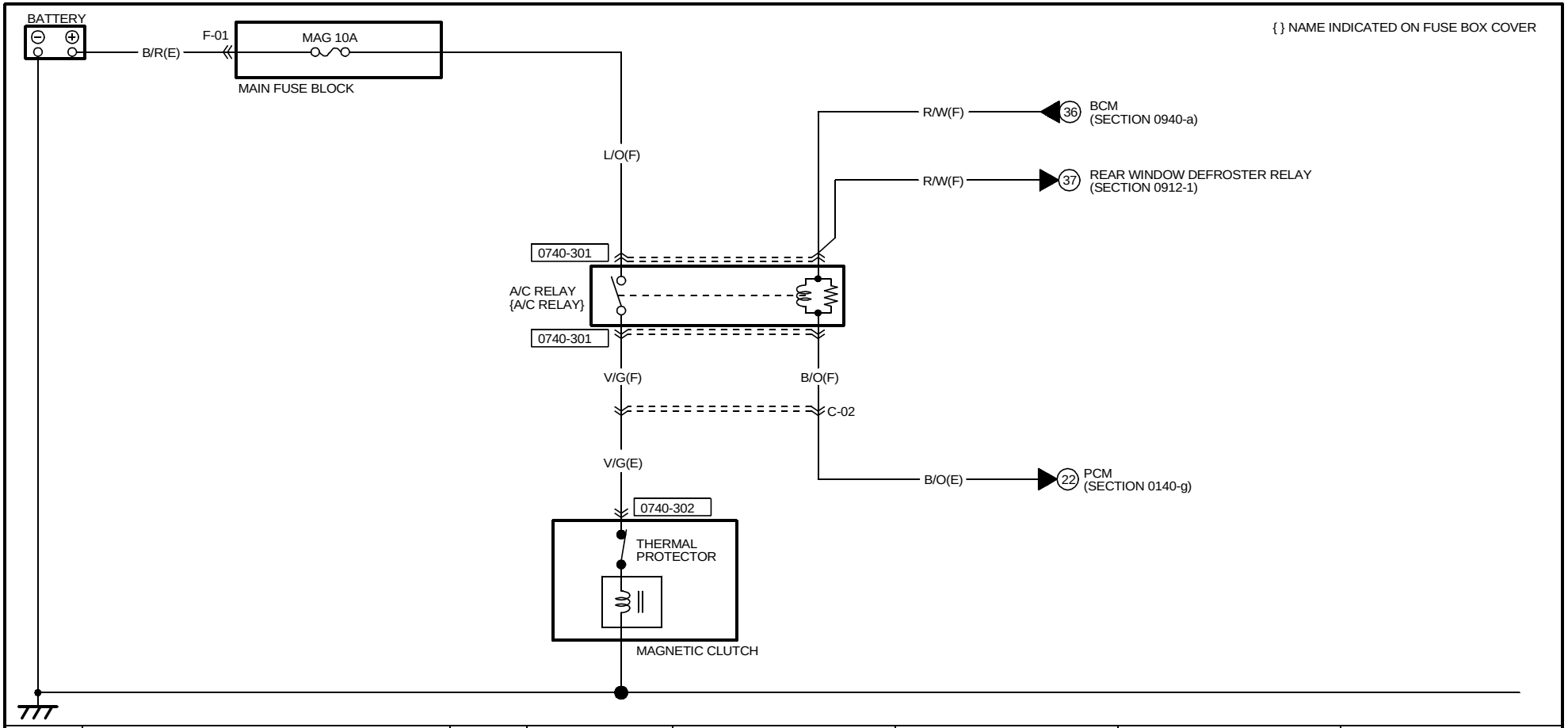

0740-301 A/C RELAY(F)	0740-302 MAGNETIC CLUTCH(E)				
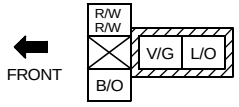 NOTE:SEEN FROM TERMINAL SIDE					

cardiagn.com

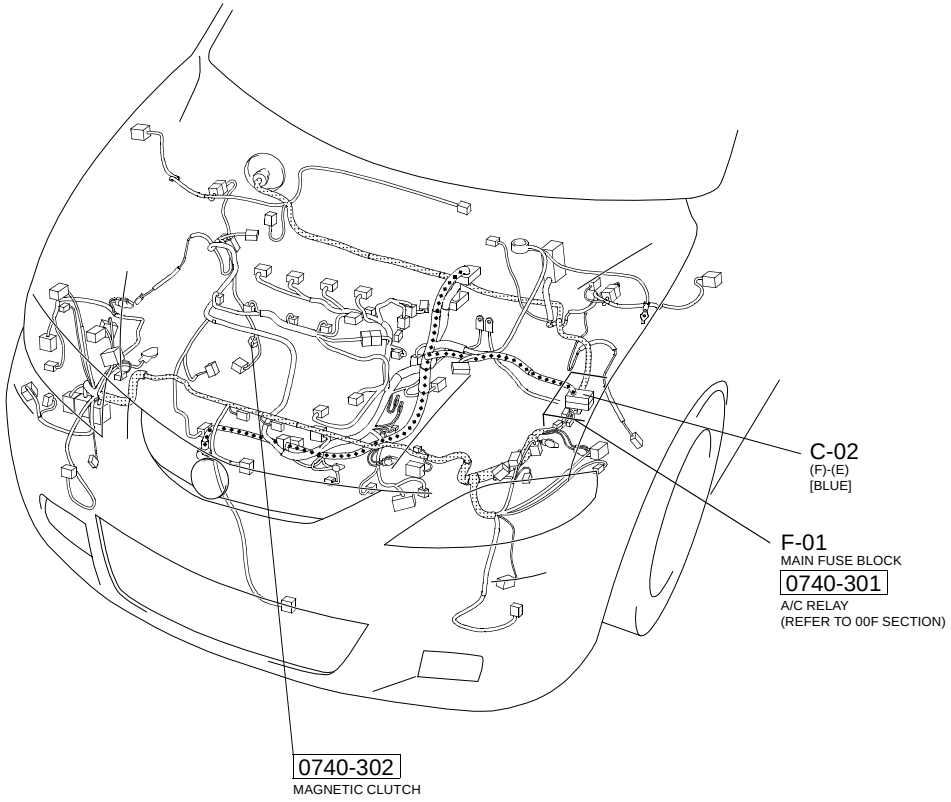

cardiagn.com

cardiagn.com

AIR BAG SYSTEM

SERVICE WARNINGS

DPE081000000W02

Air Bag Module Inspection

- Inspecting an air bag module using a tester can operate (deploy) the air bag module, which may cause serious injury. Do not use a tester to inspect an air bag module. Always use the on-board diagnostic function to diagnose the air bag module for malfunctions.

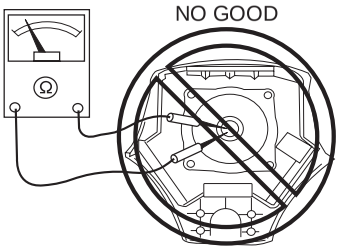

DPE810ZW1002

Air Bag Module Handling

- Handling a live (undeployed) air bag module that is pointed toward your body could result in serious injury if the air bag module were to accidentally operate (deploy). When carrying a live (undeployed) air bag module, point the deployment surface away from your body to lessen the chance of injury in case it operates (deploys).

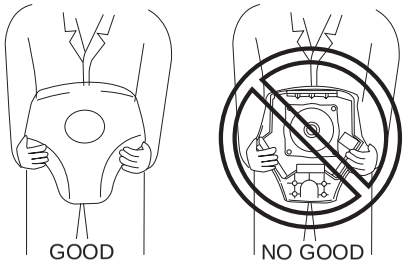

DPE810ZW1003

- A live (undeployed) air bag module placed with its deployment surface to ground is dangerous. If the air bag module were to accidentally operate (deploy), it could cause serious injury. Always place a live (undeployed) air bag module with its deployment surface up.

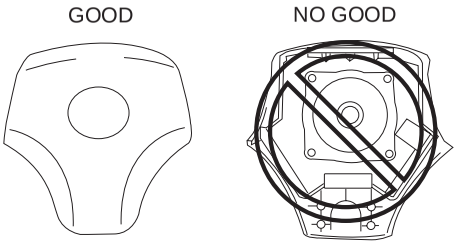

DPE810ZW1004

Side Air Bag Module Handling

- When a side air bag module operates (deploys) due to a collision, the interior of the seat back (pad, frame, trim) may become damaged. If a side air bag does not operate (deploy) normally from a seat back that has been reused, a serious accident may result. After a side air bag has operated (deployed), always replace both the side air bag module and the seat back (pad, frame, trim) with new parts. After servicing, verify that the seat operates normally and that the wiring harness is not caught.

SAS control module Handling

- Removing the SAS control module or disconnecting the SAS control module connector with the ignition switch at the ON position can activate the sensor in the SAS control module and operate (deploy) the air bags and pre-tensioner seat belts, which may cause serious injury. Before removing the SAS control module or disconnecting the SAS control module connector, always turn the ignition switch to the LOCK position, disconnect the negative battery cable, and then wait for 1 min or more to allow the backup power supply of the SAS control module to deplete its stored power.
- Connecting the SAS control module connector with the SAS control module not securely fixed to the vehicle is dangerous. The sensor in the SAS control module could send an electrical signal to the air bag modules and pre-tensioner seat belts. This will operate (deploy) the air bags and pre-tensioner seat belts, which may result in serious injury. Therefore, before connecting the connector, securely fix the SAS control module to the vehicle.
- Because a sensor is built into the SAS control module, once the air bags and pre-tensioner seat belts have operated (deployed) due to a collision or other causes, the SAS control module must be replaced with a new one even if the used one does not have any visible external damage or deformation. The used SAS control module may have been damaged internally which may cause improper operation. If the SAS control module is reused, the air bags and pre-tensioner seat belts may not operate (deploy) normally, which could result in a serious accident. Always replace the SAS control module with a new one. The SAS control module cannot be bench-checked or self-checked.

Crash Zone Sensor Handling

- Removing the crash zone sensor or disconnecting the crash zone sensor connector with the ignition switch at the ON position can activate the crash zone sensor and operate (deploy) the air bags and pre-tensioner seat belts, which may cause serious injury. Before removing the crash zone sensor or disconnecting the crash zone sensor connector, always turn the ignition switch to the LOCK position, disconnect the negative battery cable, and then wait for 1 min or more to allow the backup power supply of the SAS control module to deplete its stored power.
- If the crash zone sensor is subjected to shock or the sensor is disassembled, the air bags and pre-tensioner seat belts may accidentally operate (deploy) and cause injury, or the system may fail to operate normally and cause a serious accident. Do not subject the crash zone sensor to shock or disassemble the sensor.
- Because a sensor is built into the crash zone sensor, once the air bags and pre-tensioner seat belts have operated (deployed) due to a collision or other causes, the crash zone sensor must be replaced with a new one even if the used one does not have any visible external damage or deformation. If the crash zone sensor is reused, the air bags and pre-tensioner seat belts may not operate (deploy) normally, which could result in a serious accident. Always replace the crash zone sensor with a new one. The crash zone sensor cannot be bench-checked or self-checked.

cardiagn.com

Side Air Bag Sensor Handling

- Removing the side air bag sensor or disconnecting the side air bag sensor connector with the ignition switch at the ON position can activate the side air bag sensor and operate (deploy) the side air bag, which may cause serious injury. Before removing the side air bag sensor or disconnecting the side air bag sensor connector, always turn the ignition switch to the LOCK position, disconnect the negative battery cable, and then wait for 1 min or more to allow the backup power supply of the SAS control module to deplete its stored power.
- If the side air bag sensor is subjected to shock or the sensor is disassembled, the side air bag may accidentally operate (deploy) and cause injury, or the system may fail to operate normally and cause a serious accident. Do not subject the side air bag sensor to shock or disassemble the sensor.
- Because a sensor is built into the side air bag sensor, once the air bag has operated (deployed) due to a collision or other causes, the side air bag sensor must be replaced with a new one even if the used one does not have any visible external damage or deformation. If the side air bag sensor is reused, the side air bag may not operate (deploy) normally, which could result in a serious accident. Always replace the side air bag sensor with a new one. The side air bag sensor cannot be bench-checked or self-checked.

Pre-tensioner Seat Belt Inspection

- Inspecting a pre-tensioner seat belt using a tester can operate (deploy) the pre-tensioner seat belt, which may cause serious injury. Do not use a tester to inspect a pre-tensioner seat belt. Always use the on-board diagnostic function to diagnose the pre-tensioner seat belt for malfunctions.

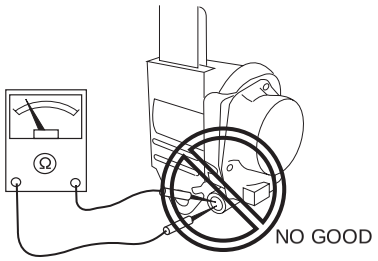

CHU0810W603

SERVICE CAUTIONS

DPE081000000W03

Air Bag System Component Disassembly

- Disassembling the air bag system components could cause it to not operate (deploy) normally. Never disassemble any air bag system components.

DPE810ZW1005

Air Bag Module, Pre-tensioner Seat Belt Handling

- Oil, grease, or water on the air bag modules may cause the air bags and pre-tensioner seat belts to fail to operate (deploy) in an accident. Never allow oil, grease, or water to get on the air bag modules or pre-tensioner seat belts.
- Inserting a screwdriver or similar object into the connector of an air bag module or a pre-tensioner seat belt may damage the connector and cause the air bag module or the pre-tensioner seat belt to operate (deploy) improperly, which may cause serious injury. Never insert any foreign objects into the air bag module or seat belt connectors.

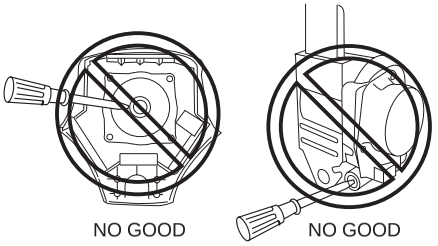

DPE810ZW1006

Air Bag Module, Pre-tensioner Seat Belt Reuse

- Even if an air bag module or a pre-tensioner seat belt does not operate (deploy) in a collision and does not have any external signs of damage, it may have been damaged internally, which may cause improper operation. Before reusing a live (undeployed) air bag module and the pre-tensioner seat belts, always use the on-board diagnostic to diagnose the air bag module and the pre-tensioner seat belts to verify that they have no malfunction.

Air Bag Wiring Harness Repair

- Incorrectly repairing an air bag wiring harness can accidentally operate (deploy) the air bag module and pre-tensioner seat belts. If a problem is found in the air bag wiring harness, always replace the wiring harness with a new one.

CHU0810W606

AIR BAG SYSTEM (INCLUDES PRE-TENSIONER SEAT BELT INFORMATION)

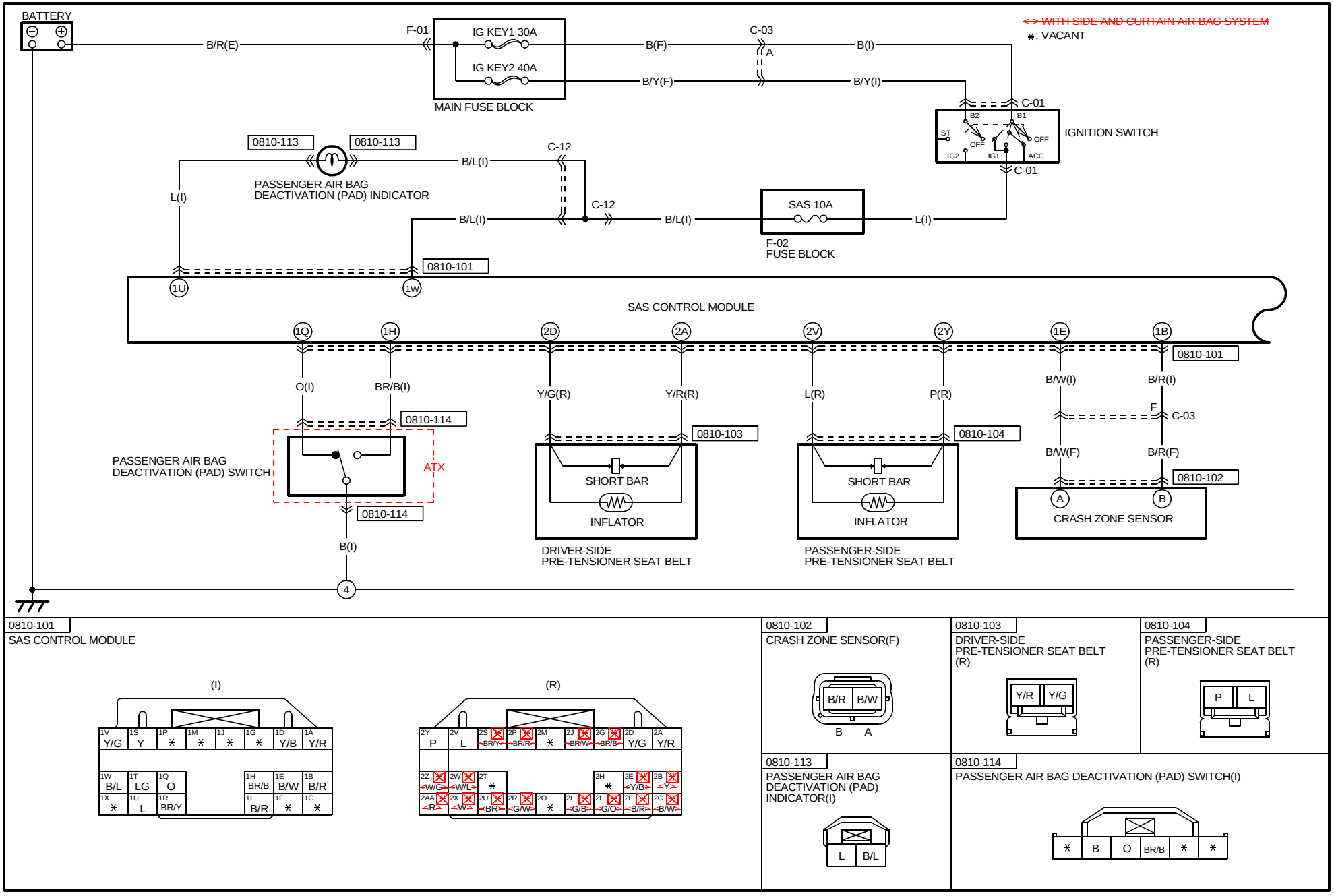

0810-101
SAS CONTROL MODULE

0810-102
CRASH ZONE SENSOR(F)

0810-103
DRIVER-SIDE
PRE-TENSIONER SEAT BELT
(R)

0810-104
PASSENGER-SIDE
PRE-TENSIONER SEAT BELT
(R)

0810-113
PASSENGER AIR BAG
DEACTIVATION (PAD)
INDICATOR(I)

0810-114
PASSENGER AIR BAG DEACTIVATION (PAD) SWITCH(I)

cardiagn.com

HARNESS SYMBOL : (F) (E) (R)

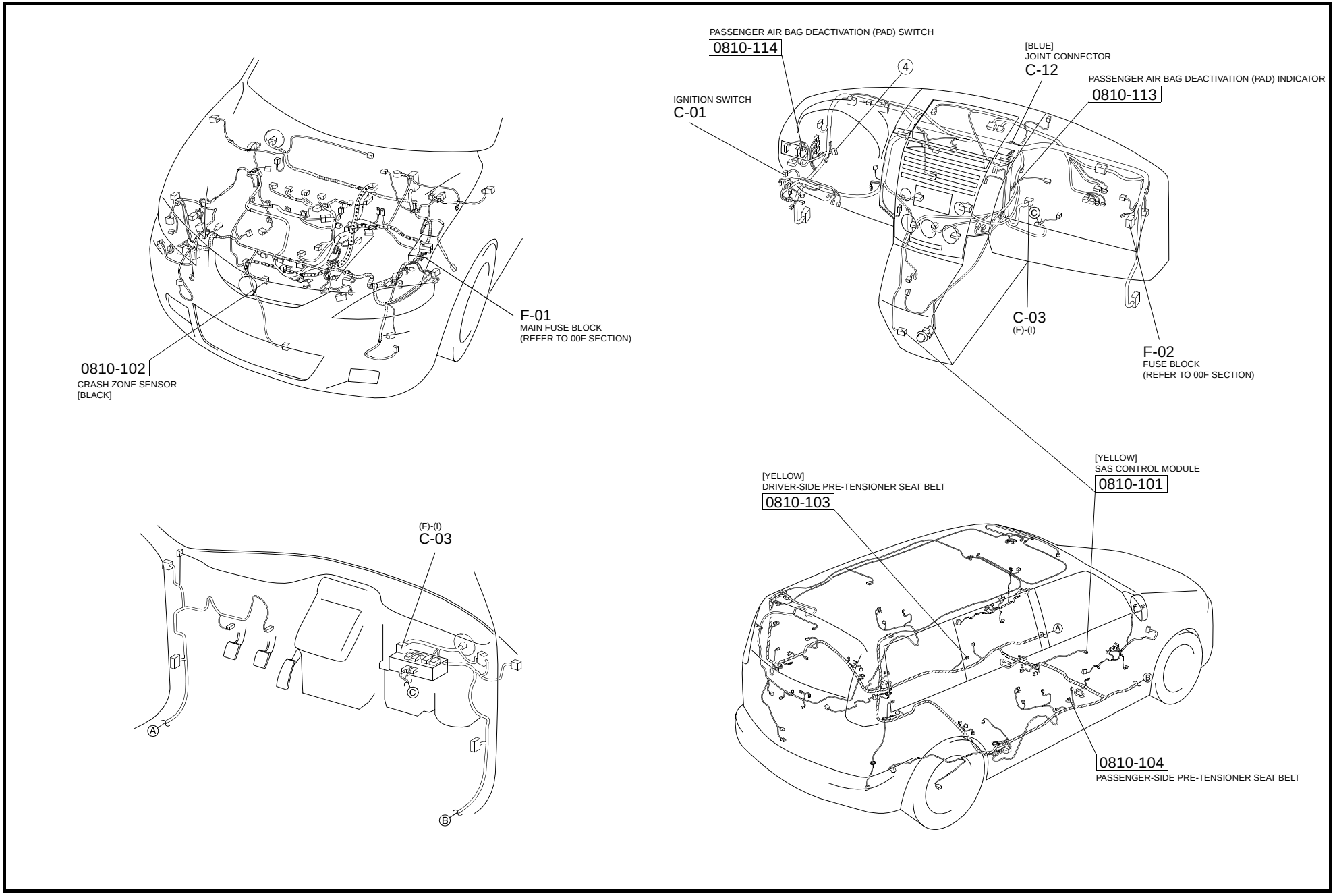

cardiagn.com

[ ] NOT USED
*: VACANT

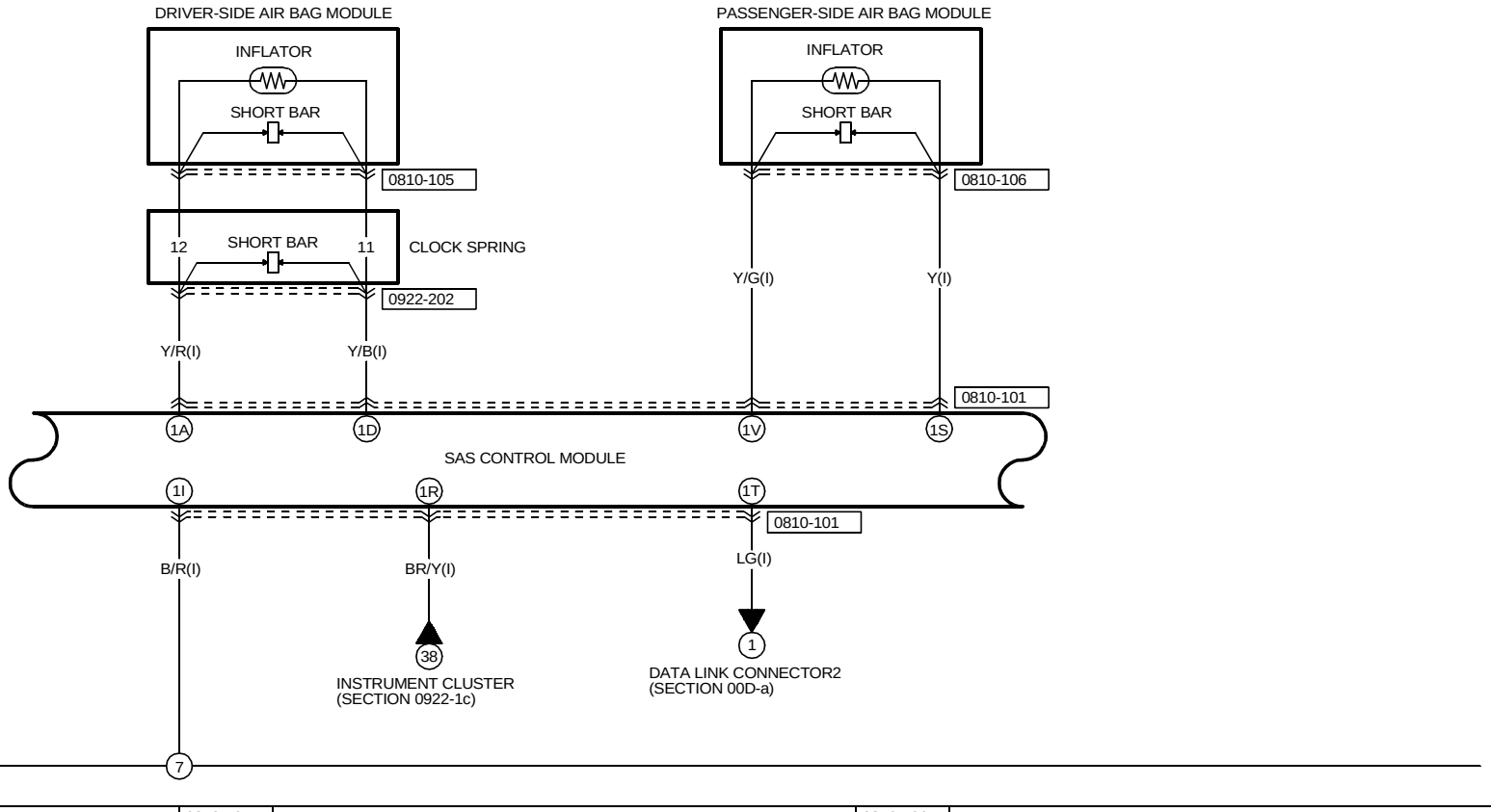

0810-101
SAS CONTROL MODULE

(I)

1V Y/G	1S Y	1P *	1M *	1J *	1G *	1D Y/B	1A Y/R
1W B/L	1T LG	1Q O		1H BR/B	1E B/W	1B B/R	
1X *	1U L	1R BR/Y		1I B/R	1F *	1C *	

0810-105
DRIVER-SIDE AIR BAG MODULE(CLOCK SPRING)

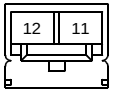

TERMINALS OF THIS CONNECTOR ARE INDICATED BY NUMBERS.

0810-106
PASSENGER-SIDE AIR BAG MODULE(I)

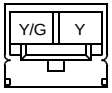

0922-202
INSTRUMENT PANEL(I)-CLOCK SPRING

(I)

* [R/W]	* [R/L]	R/B	G/W	B/P	LG/R
Y/R	Y/B	*	*	B	V/W

(CLOCK SPRING)

1	2	3	4	*	*
7	8	*	*	11	12

TERMINALS OF THIS CONNECTOR ARE INDICATED BY NUMBERS.

cardiagn.com

HARNESS SYMBOL : (F) (E) (R)

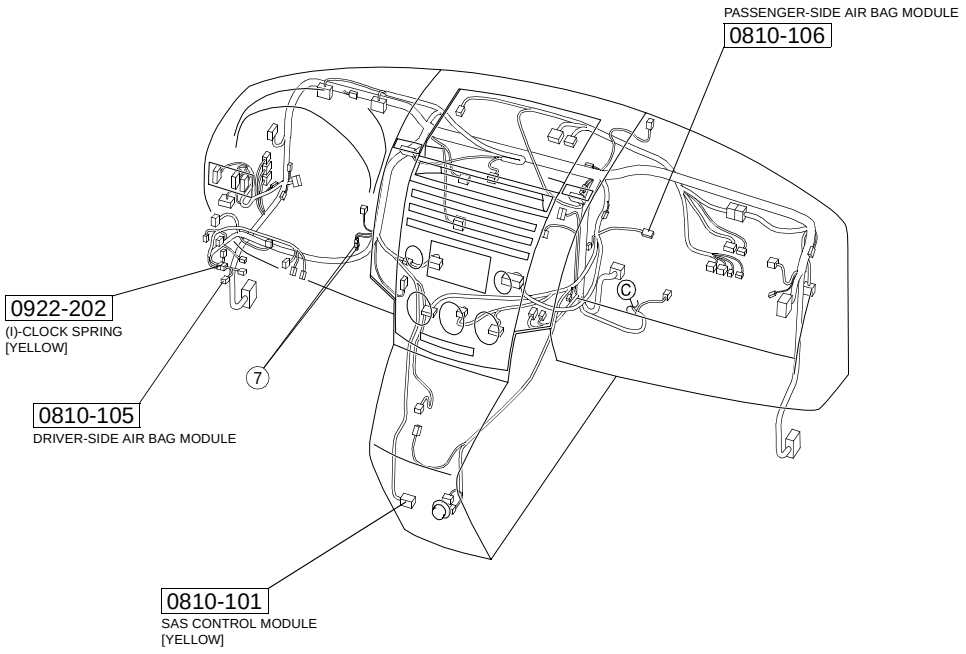

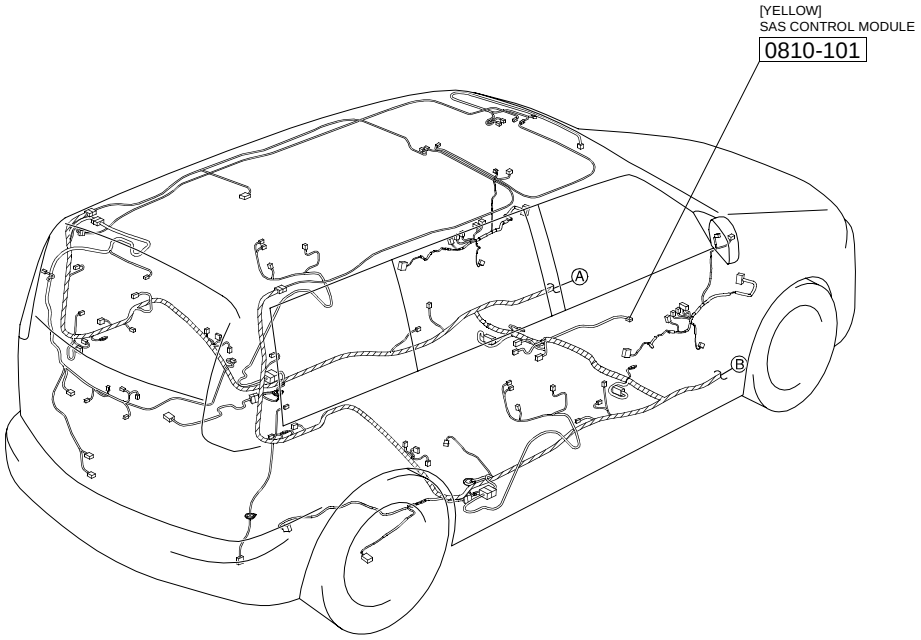

cardiagn.com

AIR BAG SYSTEM (INCLUDES PRE-TENSIONER SEAT BELT INFORMATION)

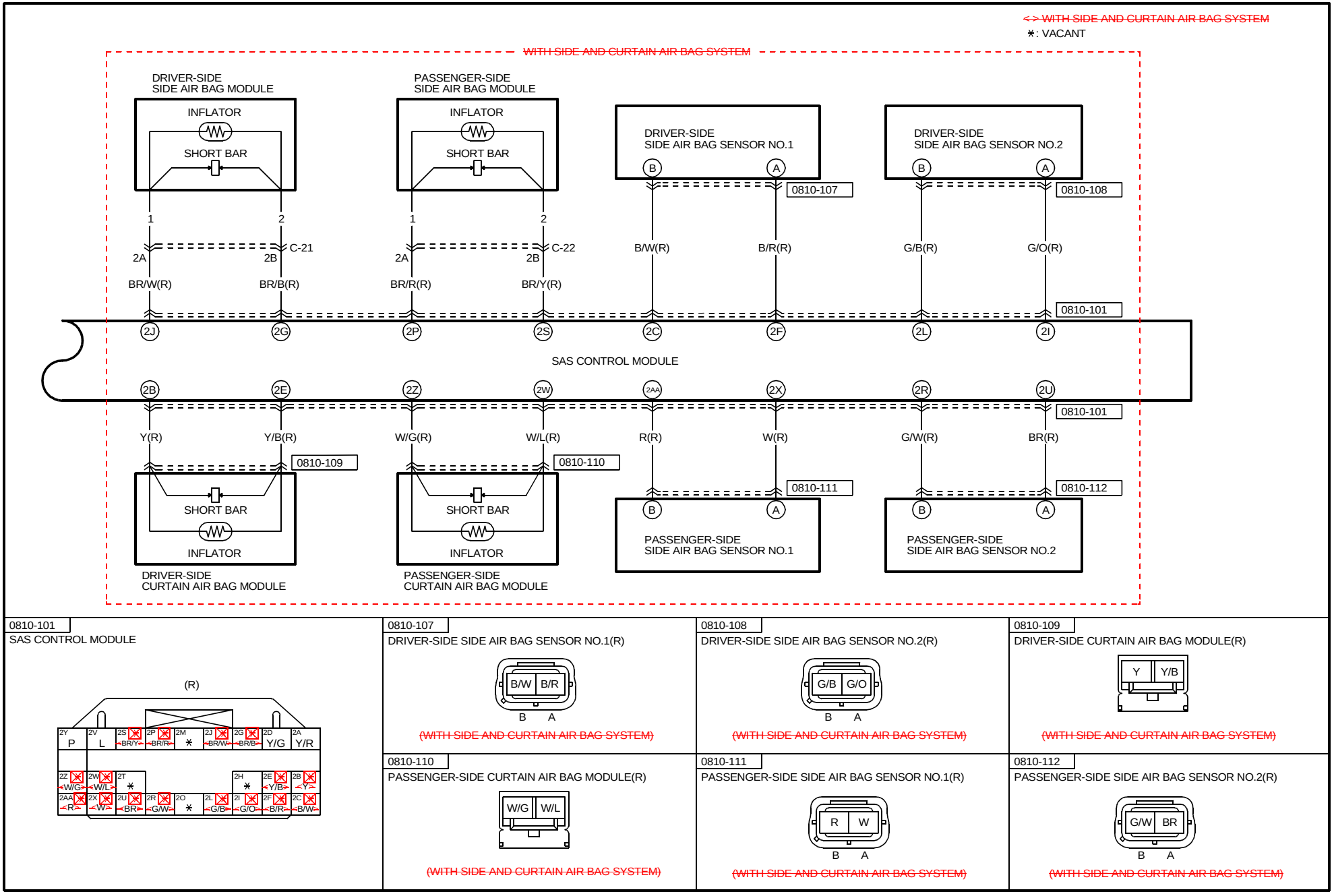

0810-101
SAS CONTROL MODULE

0810-107
DRIVER-SIDE SIDE AIR BAG SENSOR NO.1(R)

~~(WITH SIDE AND CURTAIN AIR BAG SYSTEM)~~

0810-108
DRIVER-SIDE SIDE AIR BAG SENSOR NO.2(R)

~~(WITH SIDE AND CURTAIN AIR BAG SYSTEM)~~

0810-109
DRIVER-SIDE CURTAIN AIR BAG MODULE(R)

~~(WITH SIDE AND CURTAIN AIR BAG SYSTEM)~~

0810-110
PASSENGER-SIDE CURTAIN AIR BAG MODULE(R)

~~(WITH SIDE AND CURTAIN AIR BAG SYSTEM)~~

0810-111
PASSENGER-SIDE SIDE AIR BAG SENSOR NO.1(R)

~~(WITH SIDE AND CURTAIN AIR BAG SYSTEM)~~

0810-112
PASSENGER-SIDE SIDE AIR BAG SENSOR NO.2(R)

~~(WITH SIDE AND CURTAIN AIR BAG SYSTEM)~~

cardiagn.com

HARNESS SYMBOL : (F) (E) (R)

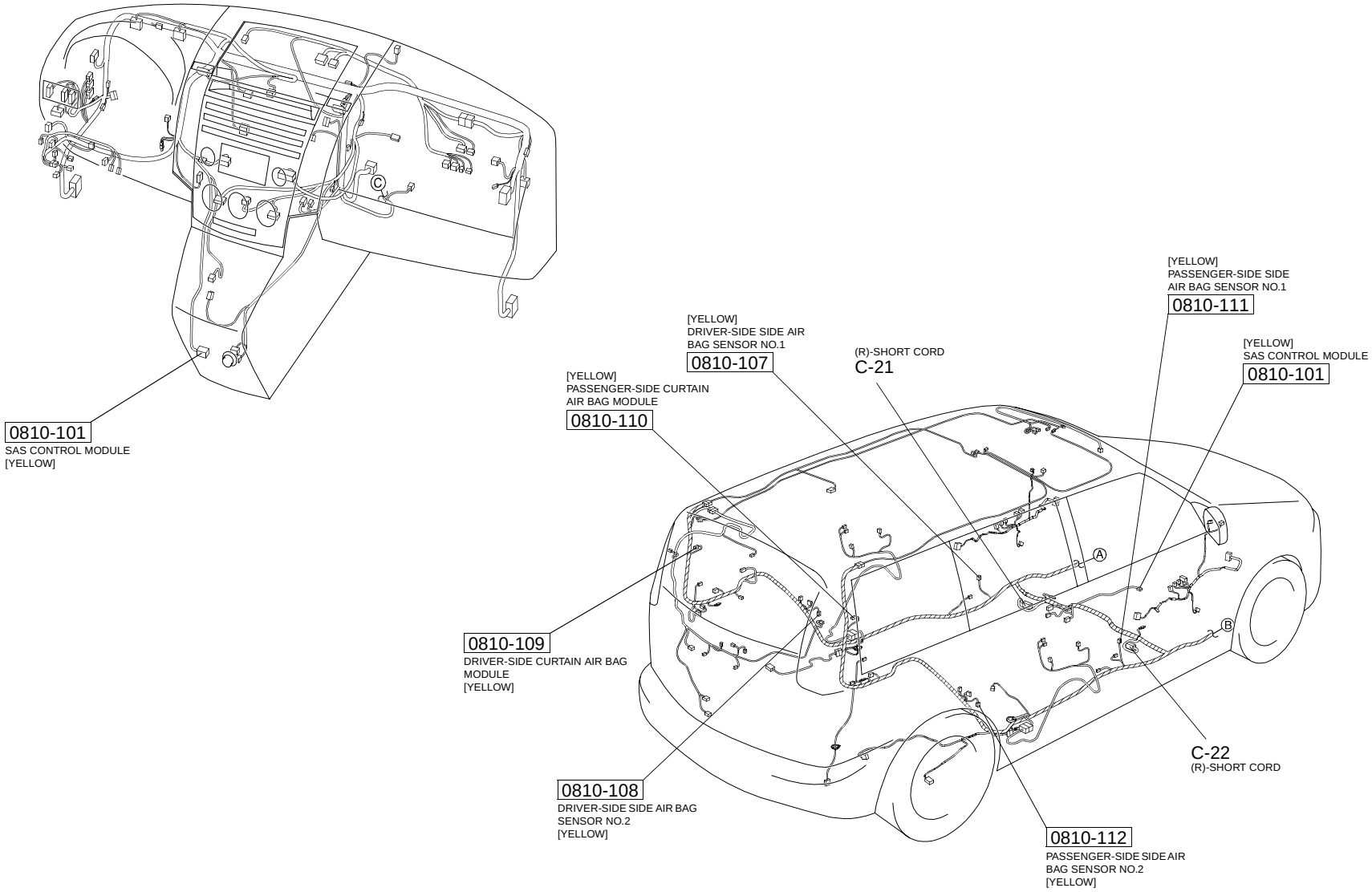

cardiagn.com

REAR WINDOW DEFROSTER ~~(INCLUDES HEATED OUTER MIRROR INFORMATION)~~

0912-1

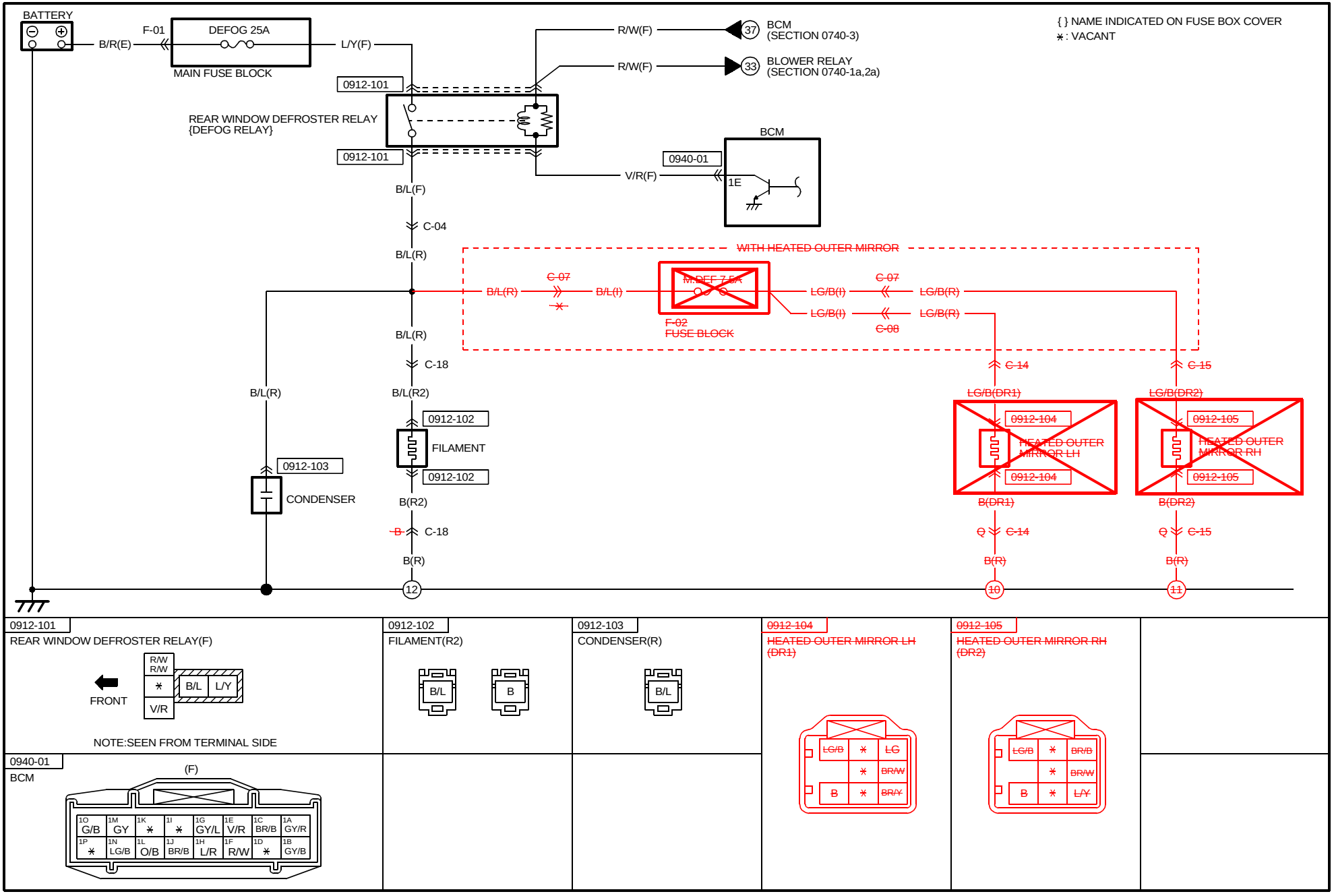

0912-101	0912-102	0912-103	0912-104	0912-105
REAR WINDOW DEFROSTER RELAY(F)	FILAMENT(R2)	CONDENSER(R)	HEATED OUTER MIRROR LH (DR1)	HEATED OUTER MIRROR RH (DR2)

NOTE:SEEN FROM TERMINAL SIDE

0940-01
BCM

cardiagn.com

HARNESS SYMBOL : (F) (E) (R)

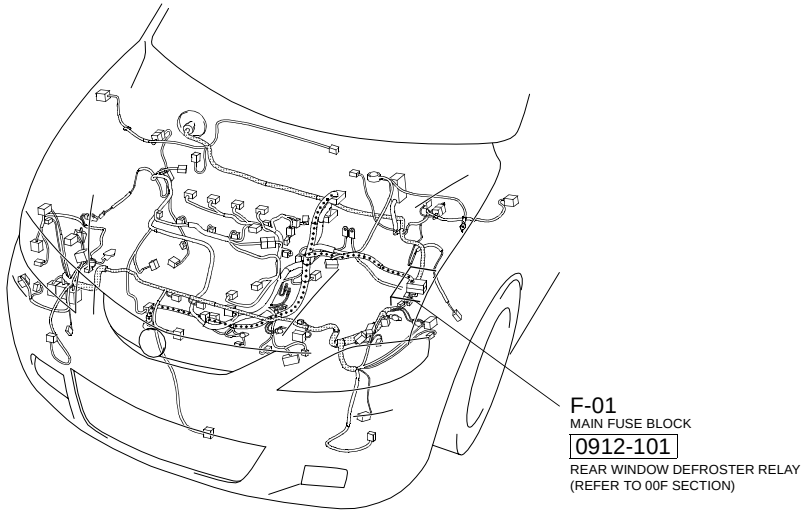

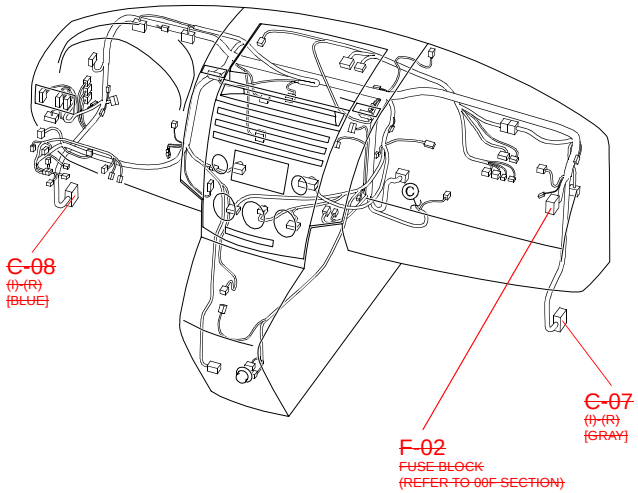

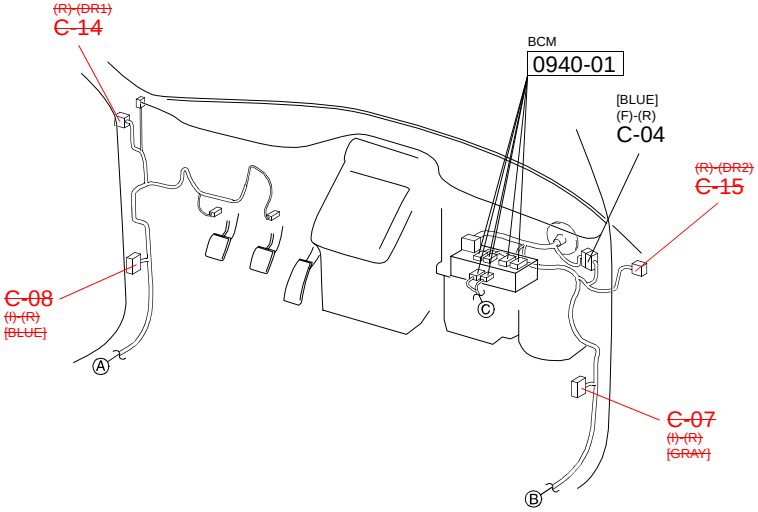

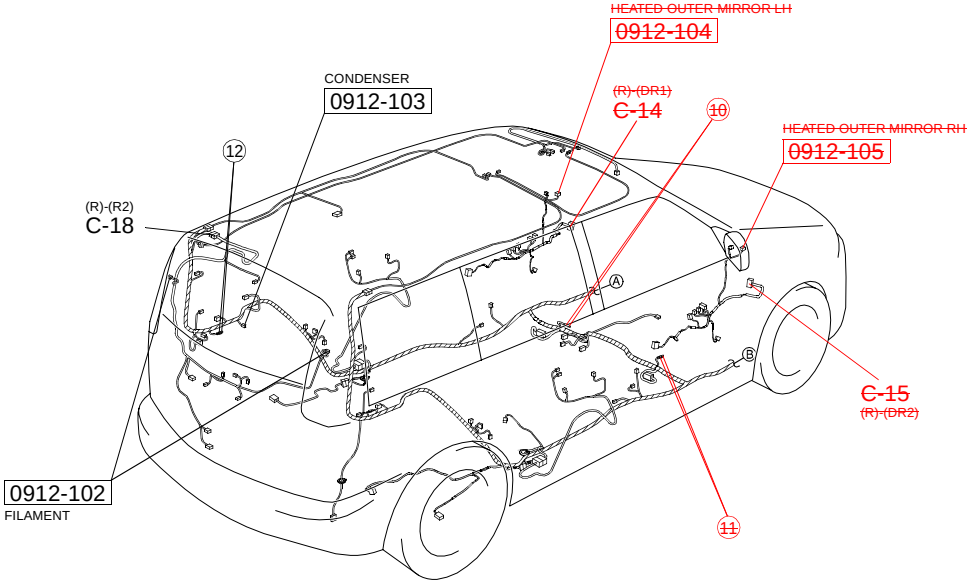

cardiagn.com

POWER WINDOW SYSTEM

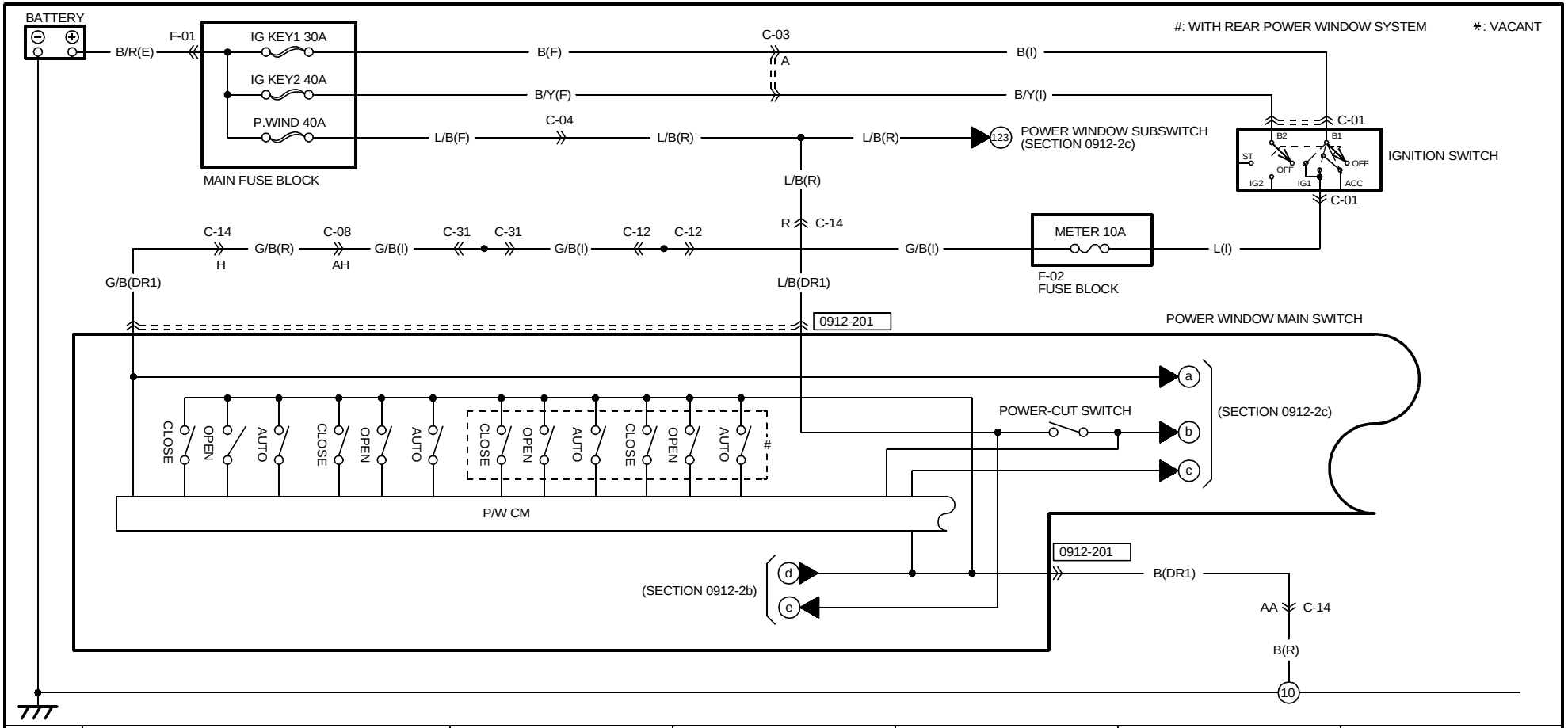

0912-201

POWER WINDOW MAIN SWITCH(DR1)

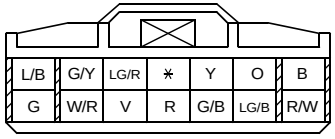

cardiagn.com

HARNESS SYMBOL : (F) (E) (R)

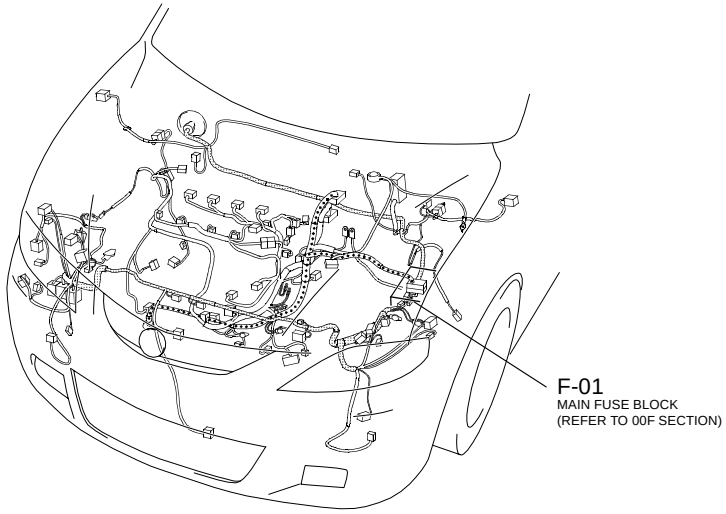

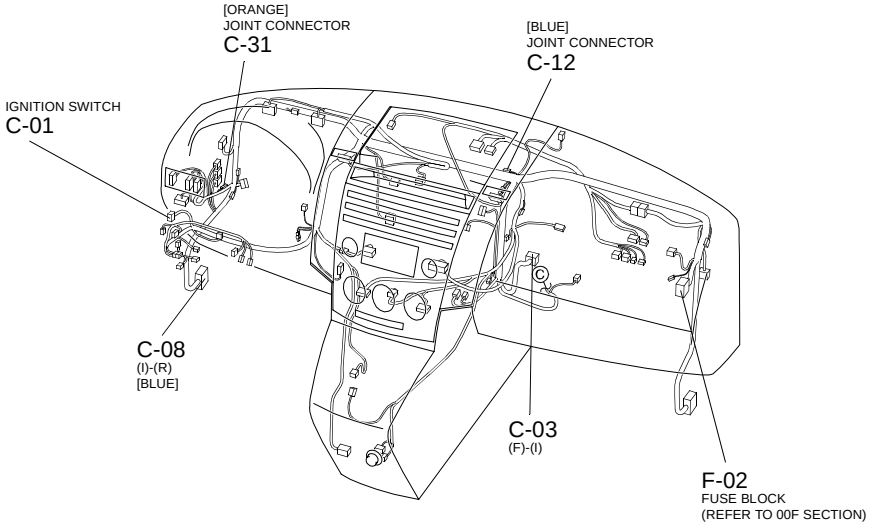

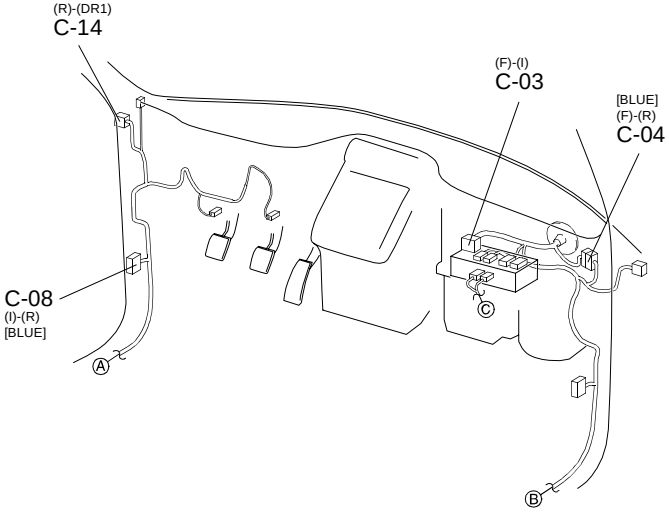

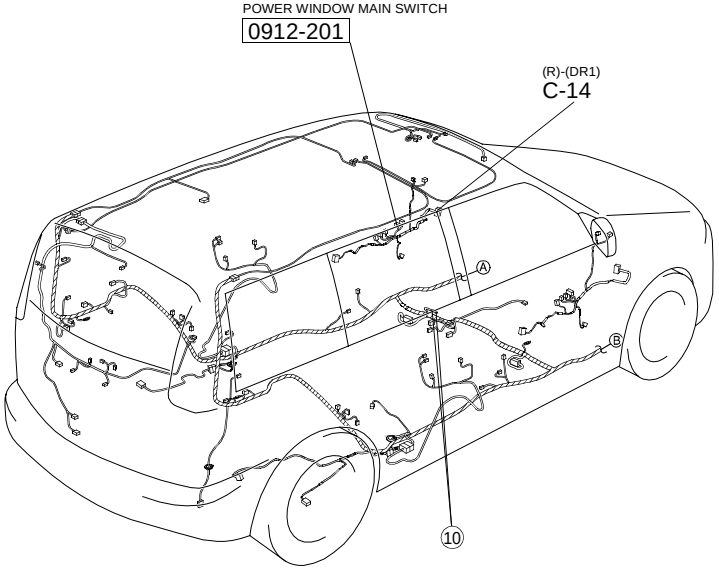

cardiagn.com

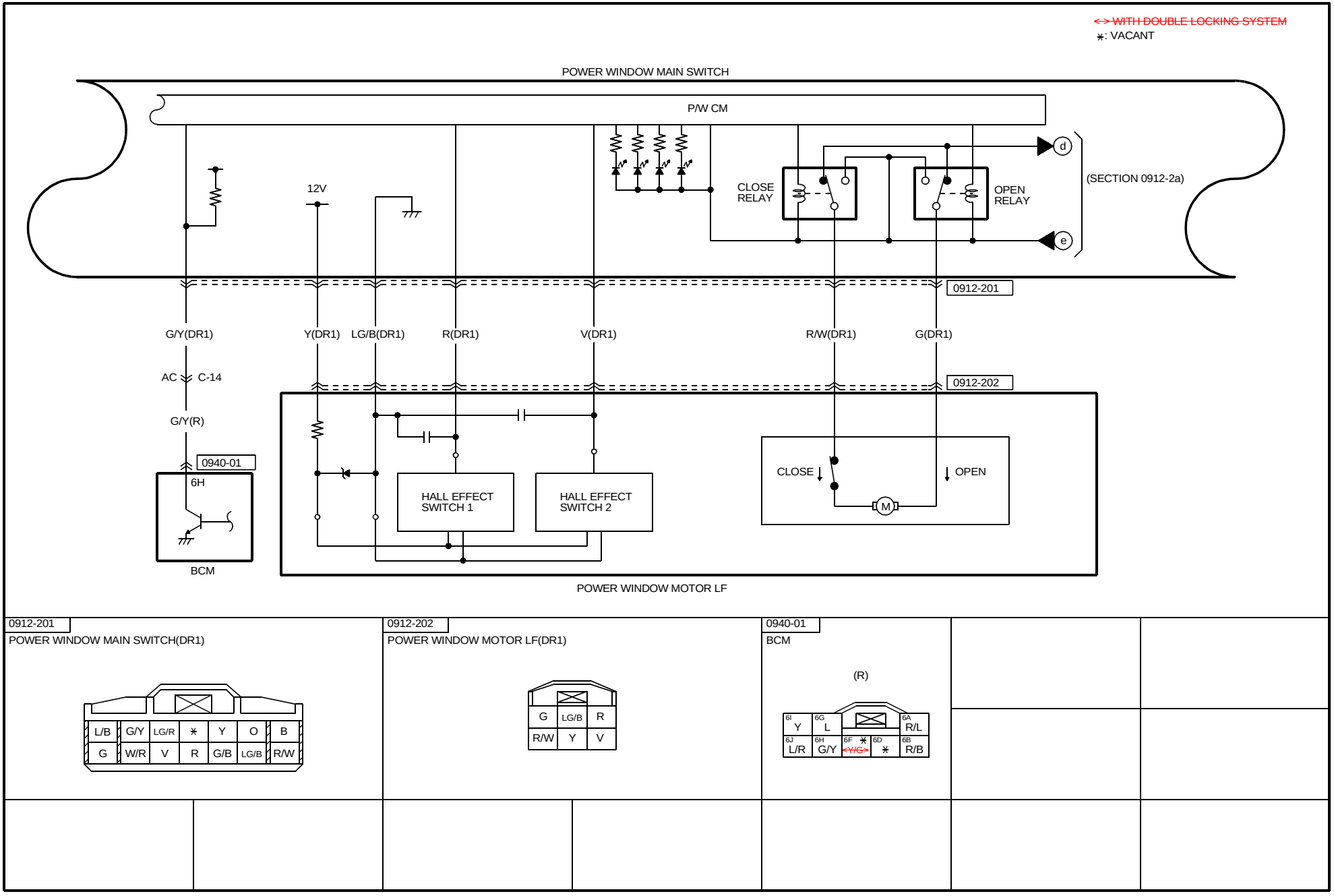

0912-201

POWER WINDOW MAIN SWITCH(DR1)

L/B	G/Y	LG/R	*	Y	O	B
G	W/R	V	R	G/B	LG/B	R/W

0912-202

POWER WINDOW MOTOR LF(DR1)

G	LG/B	R
R/W	Y	V

0940-01

BCM

(R)

6I Y	6G L			6A R/L
6J L/R	6H G/Y	6F * ~~<Y/G>~~	6D *	6B R/B

cardiagn.com

HARNESS SYMBOL : (F) (E) (R)

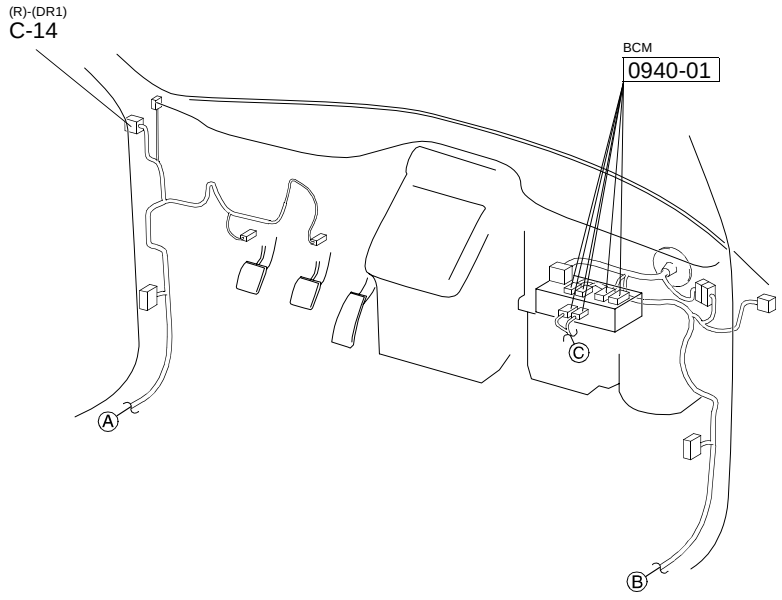

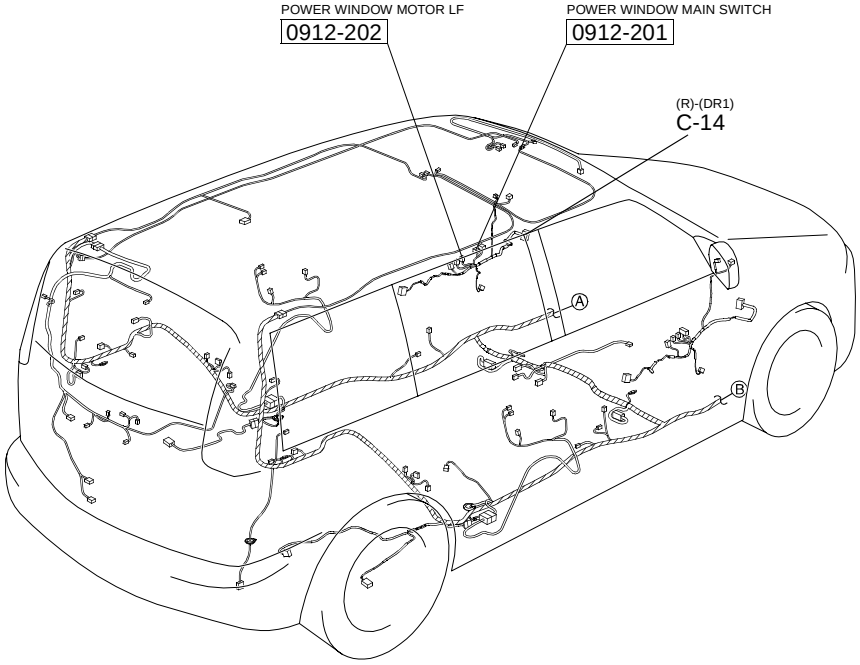

cardiagn.com

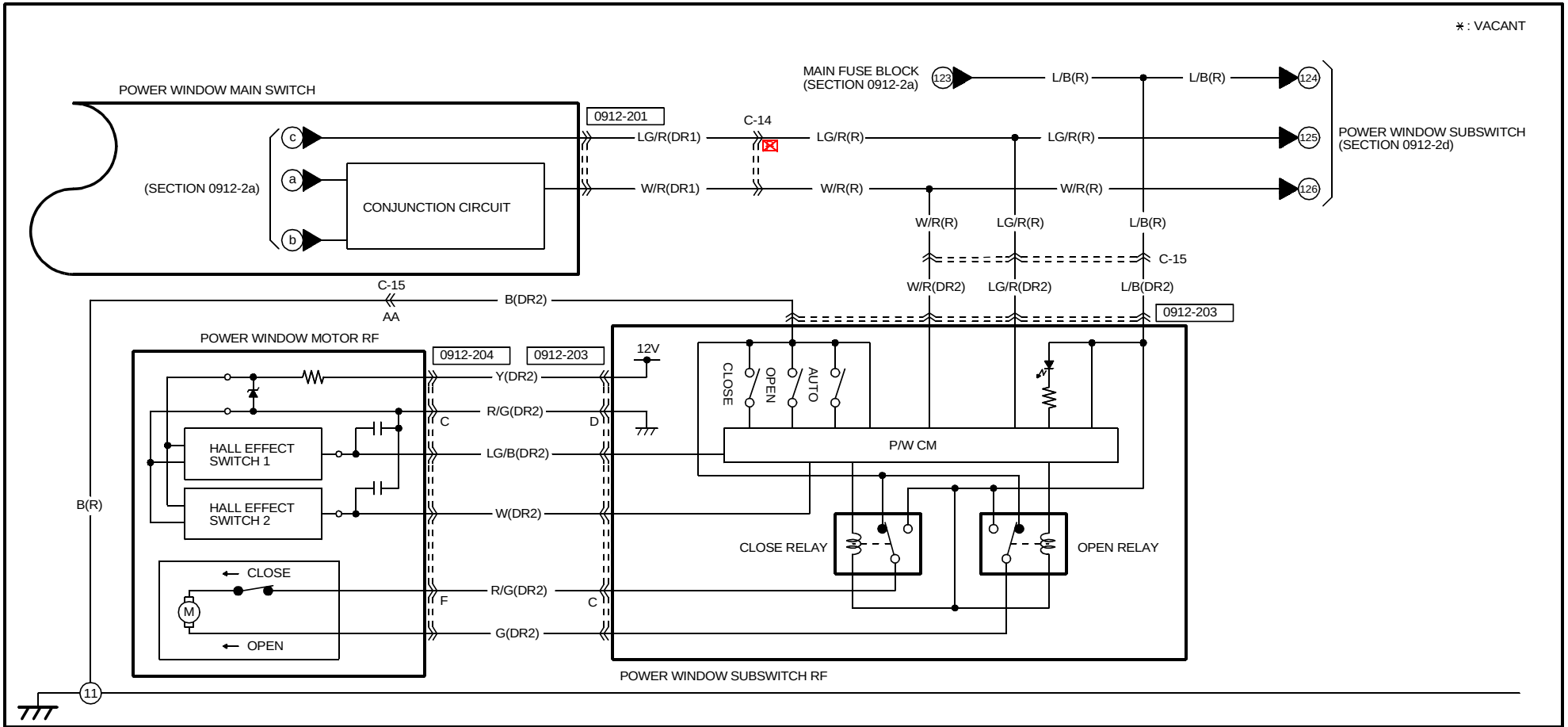

0912-201

POWER WINDOW MAIN SWITCH(DR1)

L/B	G/Y	LG/R	∗	Y	O	B
G	W/R	V	R	G/B	LG/B	R/W

0912-203

POWER WINDOW SUBSWITCH RF(DR2)

C

G	L/B	∗	∗	R/G	LG/R
W/R	LG/B	W	B	R/G	Y

D

0912-204

POWER WINDOW MOTOR RF(DR2)

C

G	R/G	LG/B
R/G	Y	W

F

cardiagn.com

HARNESS SYMBOL : (F) (E) (R)

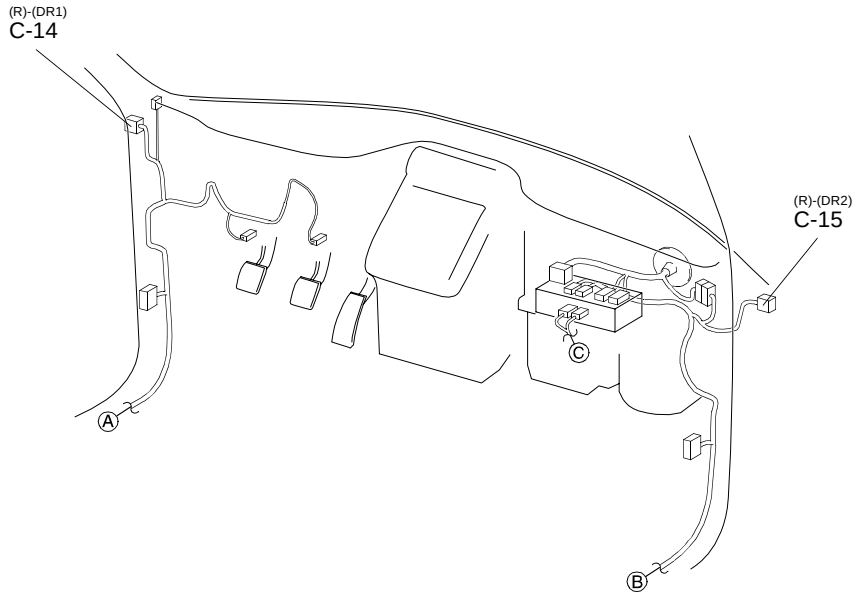

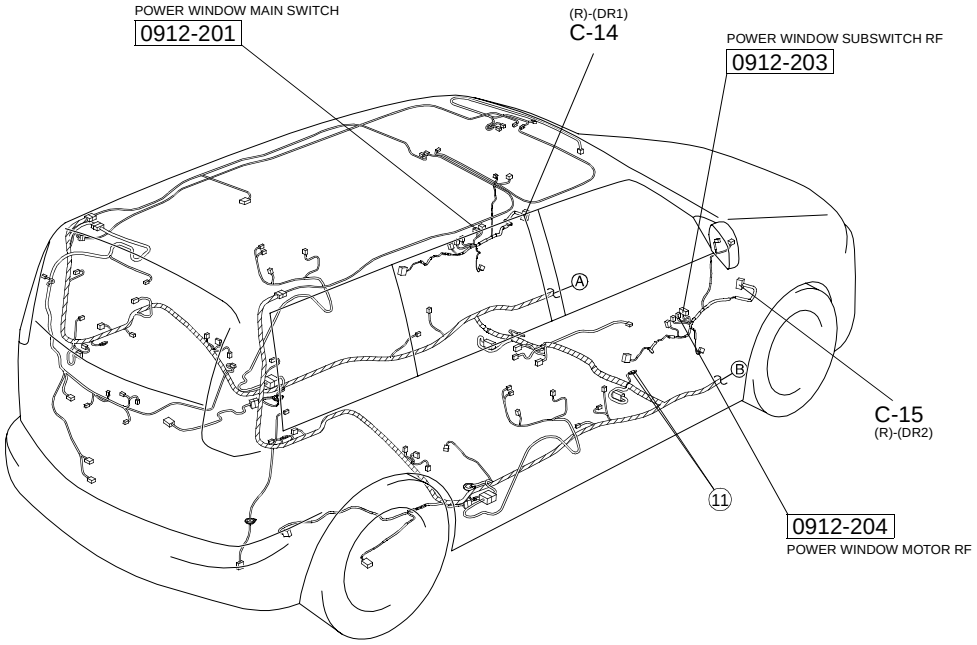

cardiagn.com

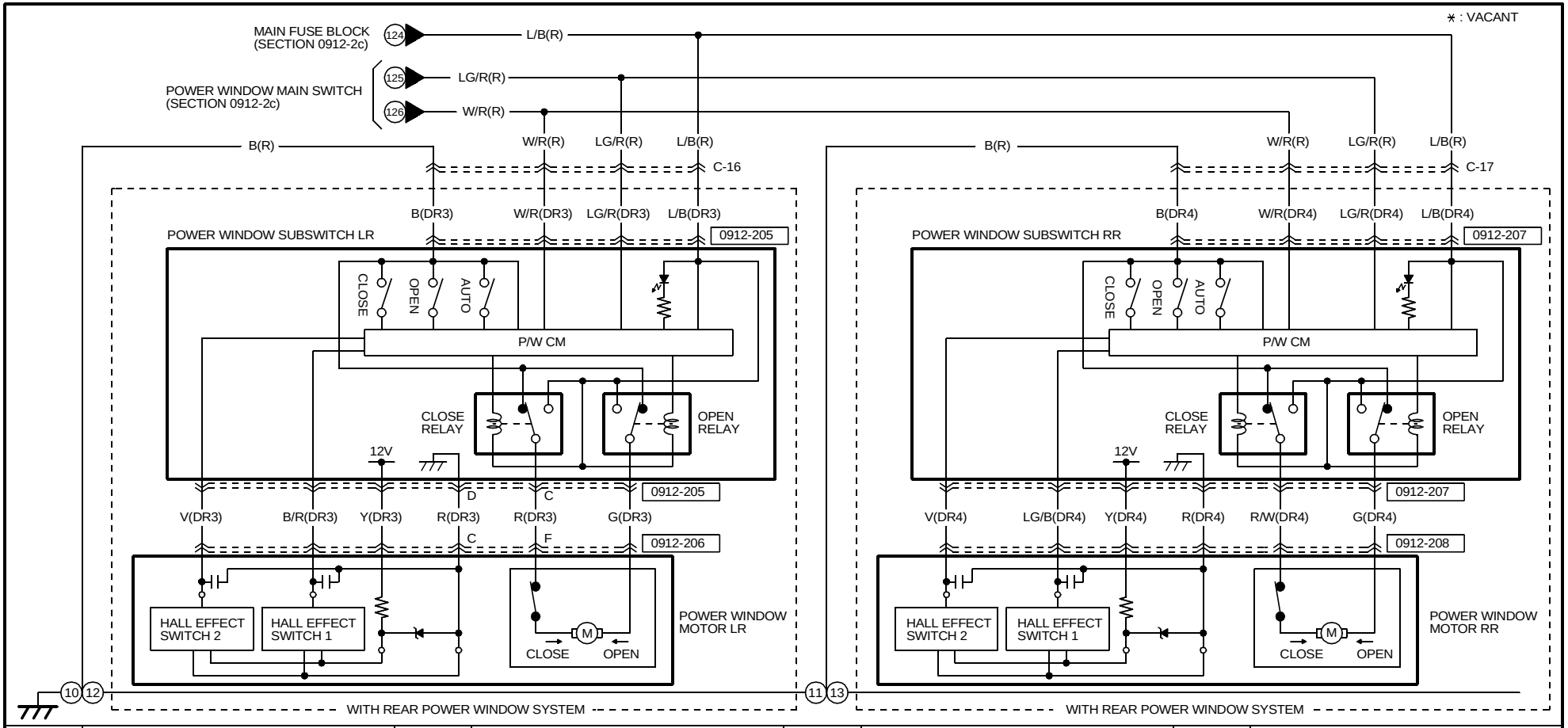

0912-205
POWER WINDOW SUBSWITCH LR(DR3)

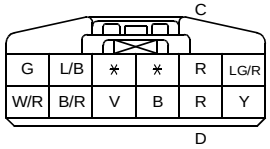

(WITH REAR POWER WINDOW SYSTEM)

0912-206
POWER WINDOW MOTOR LR(DR3)

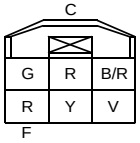

(WITH REAR POWER WINDOW SYSTEM)

0912-207
POWER WINDOW SUBSWITCH RR(DR4)

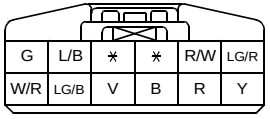

(WITH REAR POWER WINDOW SYSTEM)

0912-208
POWER WINDOW MOTOR RR(DR4)

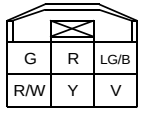

(WITH REAR POWER WINDOW SYSTEM)

cardiagn.com

HARNESS SYMBOL : (F) (E) (R)

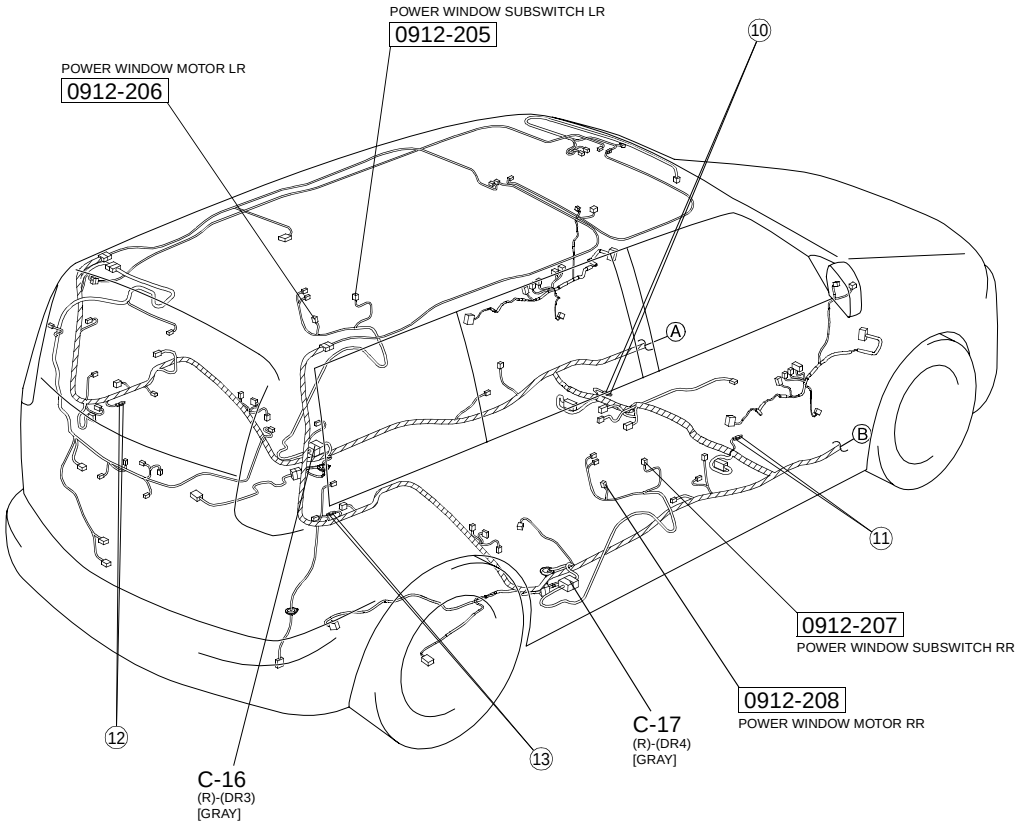

cardiagn.com

POWER OUTER MIRROR

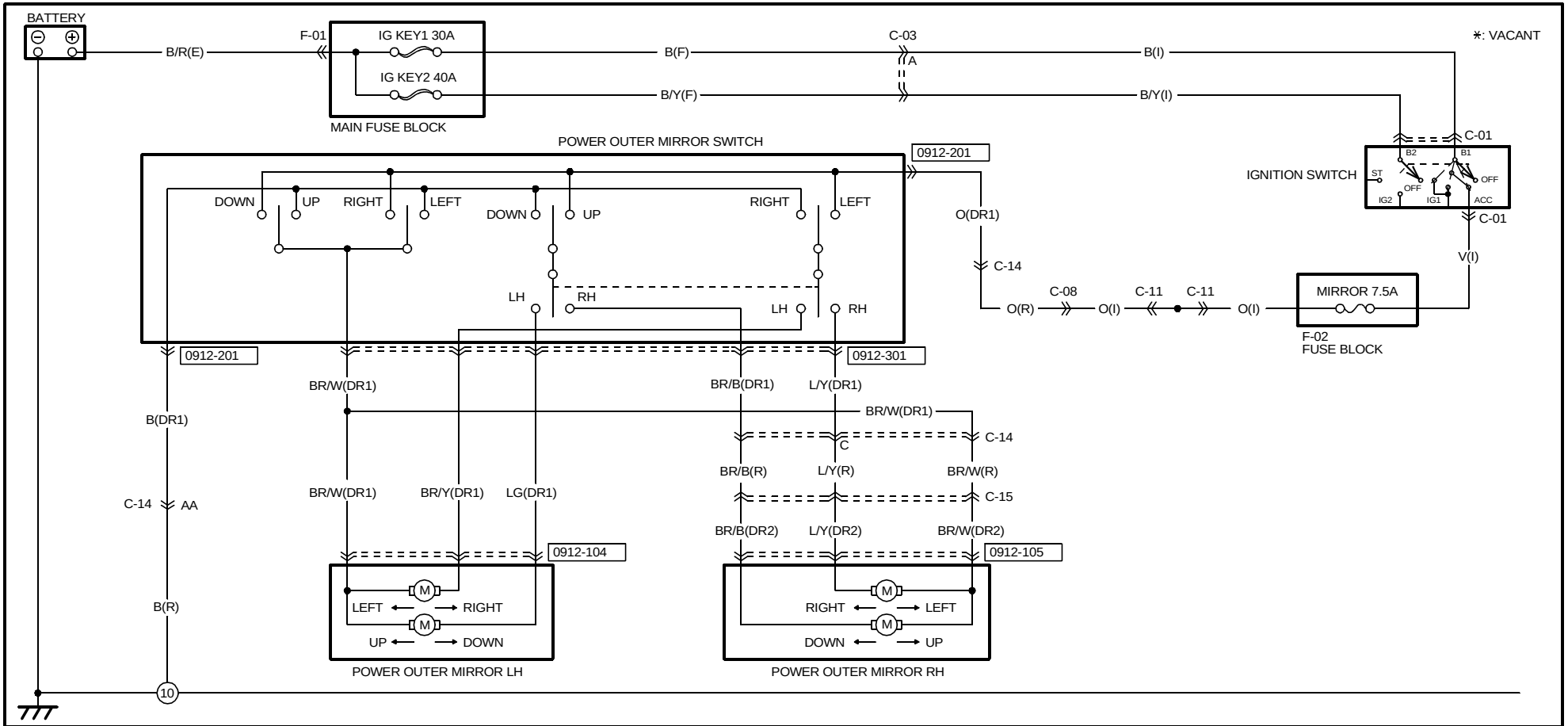

0912-301
POWER OUTER MIRROR SWITCH(DR1)

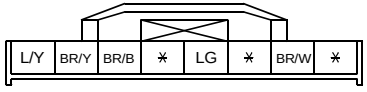

0912-104
POWER OUTER MIRROR LH (DR1)

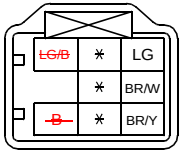

0912-105
POWER OUTER MIRROR RH (DR2)

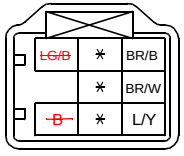

0912-201
POWER OUTER MIRROR SWITCH(DR1)

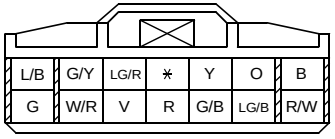

cardiagn.com

HARNESS SYMBOL : (F) (E) (R)

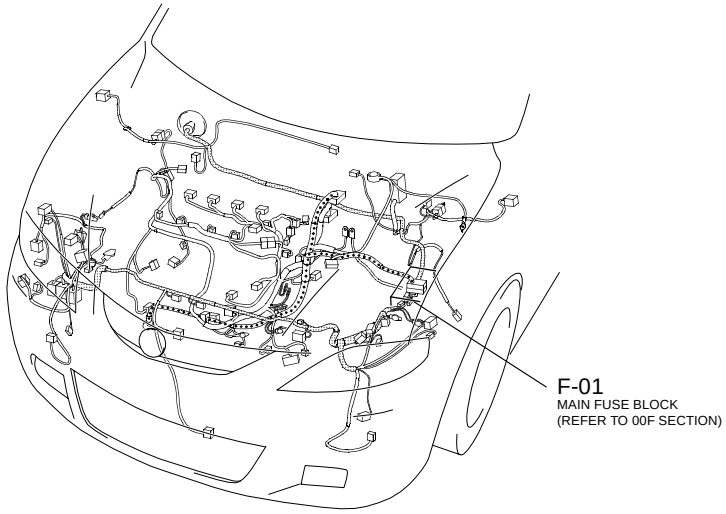

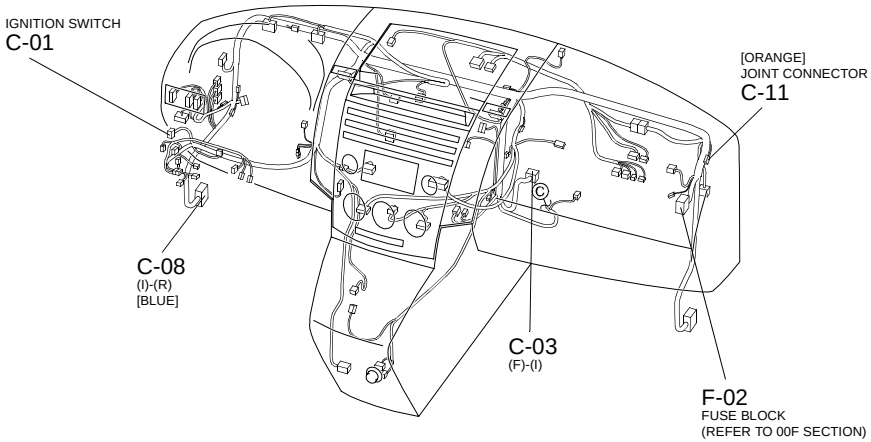

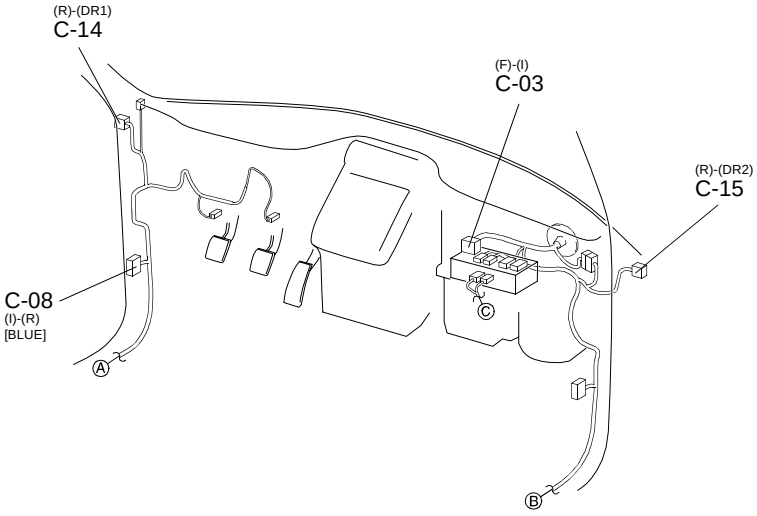

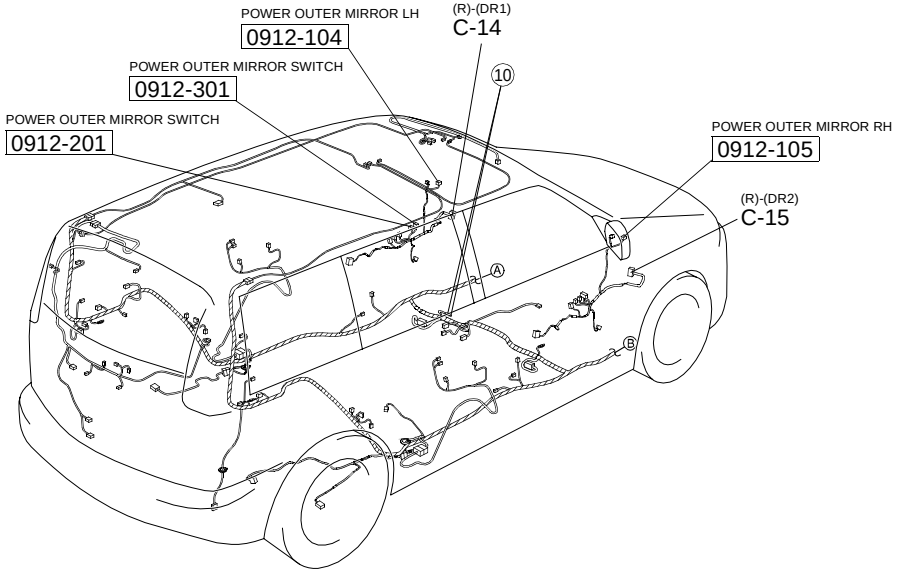

cardiagn.com

SEAT WARMER

0913

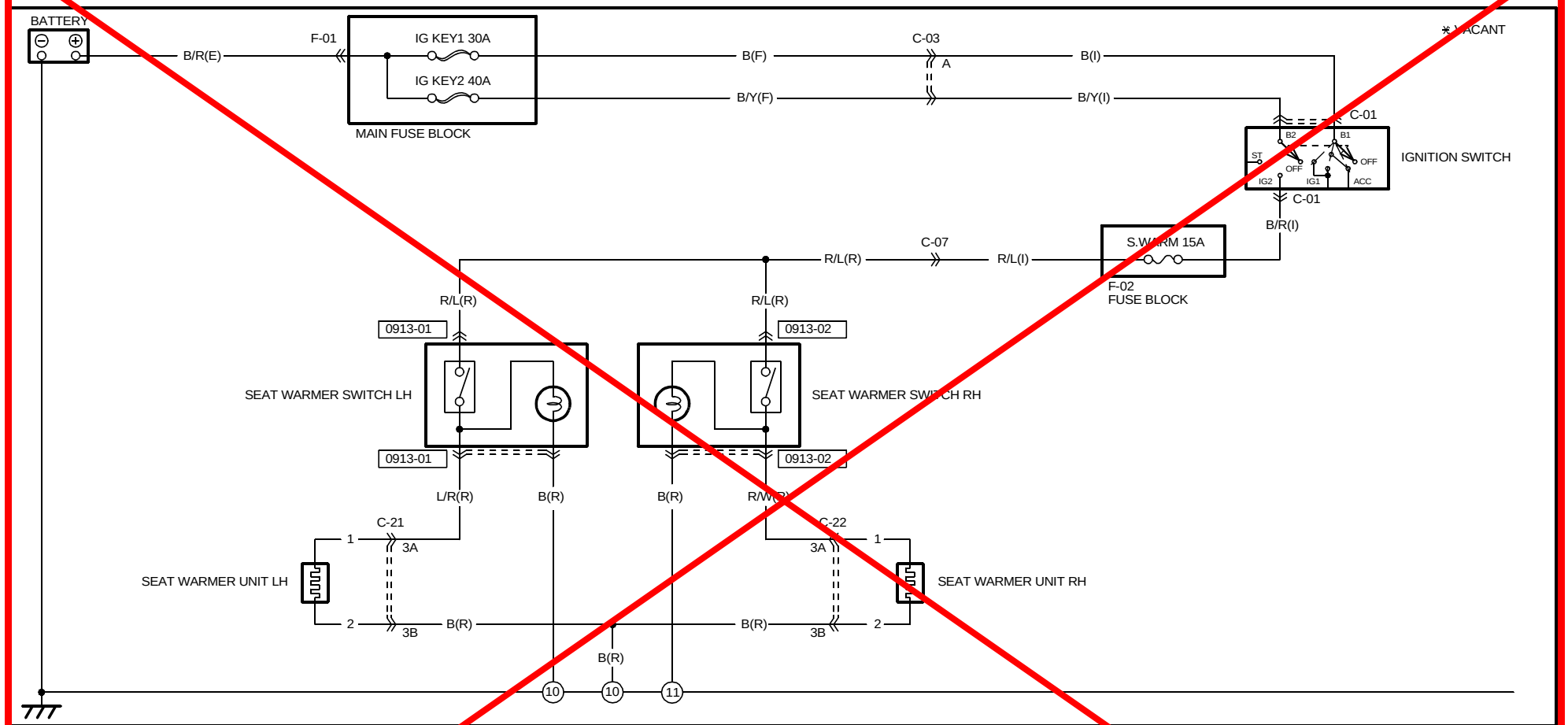

0913-01 SEAT WARMER SWITCH LH(R)	0913-02 SEAT WARMER SWITCH RH(R)		
LG/R, B/Y, L/R, R/L, *, B	LG/R, B/Y, R/W, R/L, *, B		

cardiagn.com

HARNESS SYMBOL : (F) (E) (R)

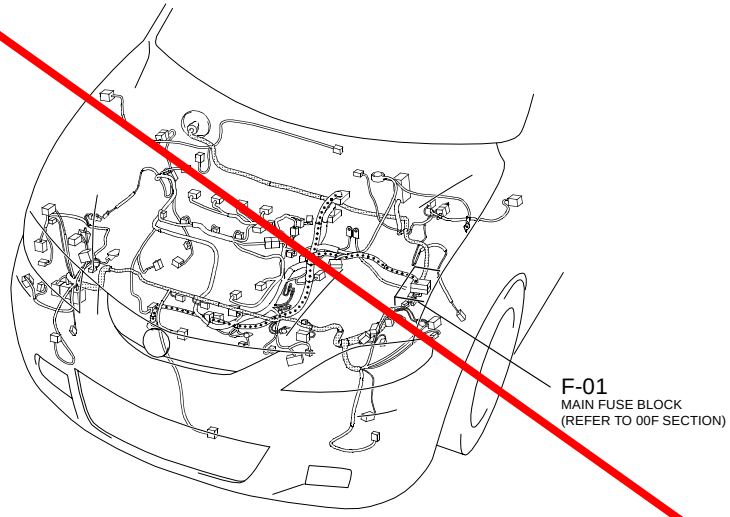

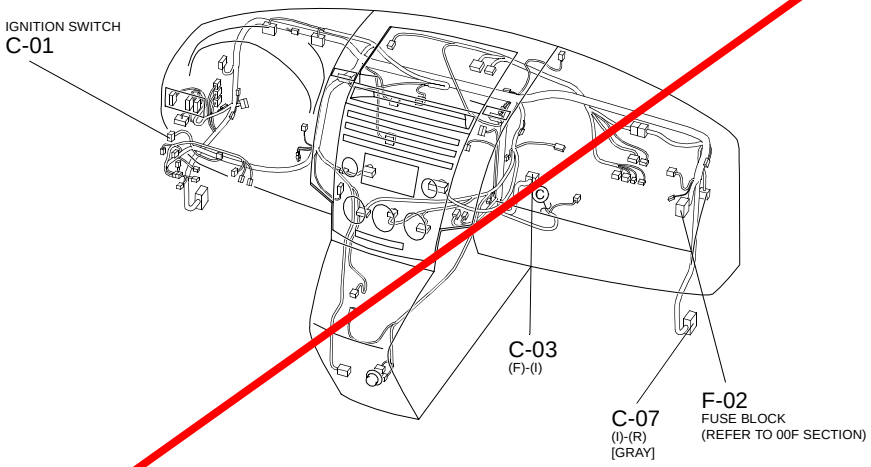

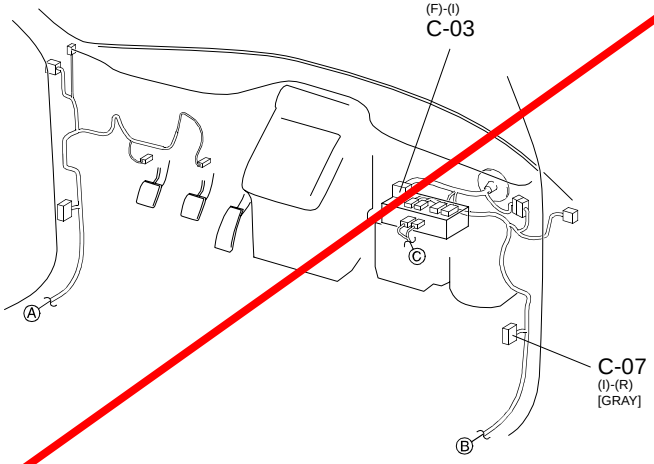

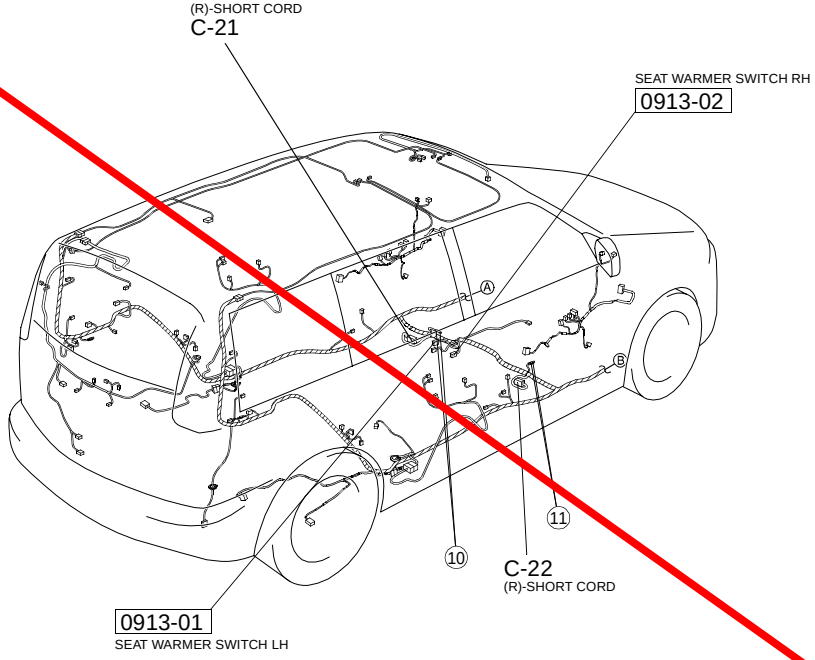

105
cardiagn.com

POWER DOOR LOCK SYSTEM ~~(WITHOUT DOUBLE LOCKING SYSTEM)~~

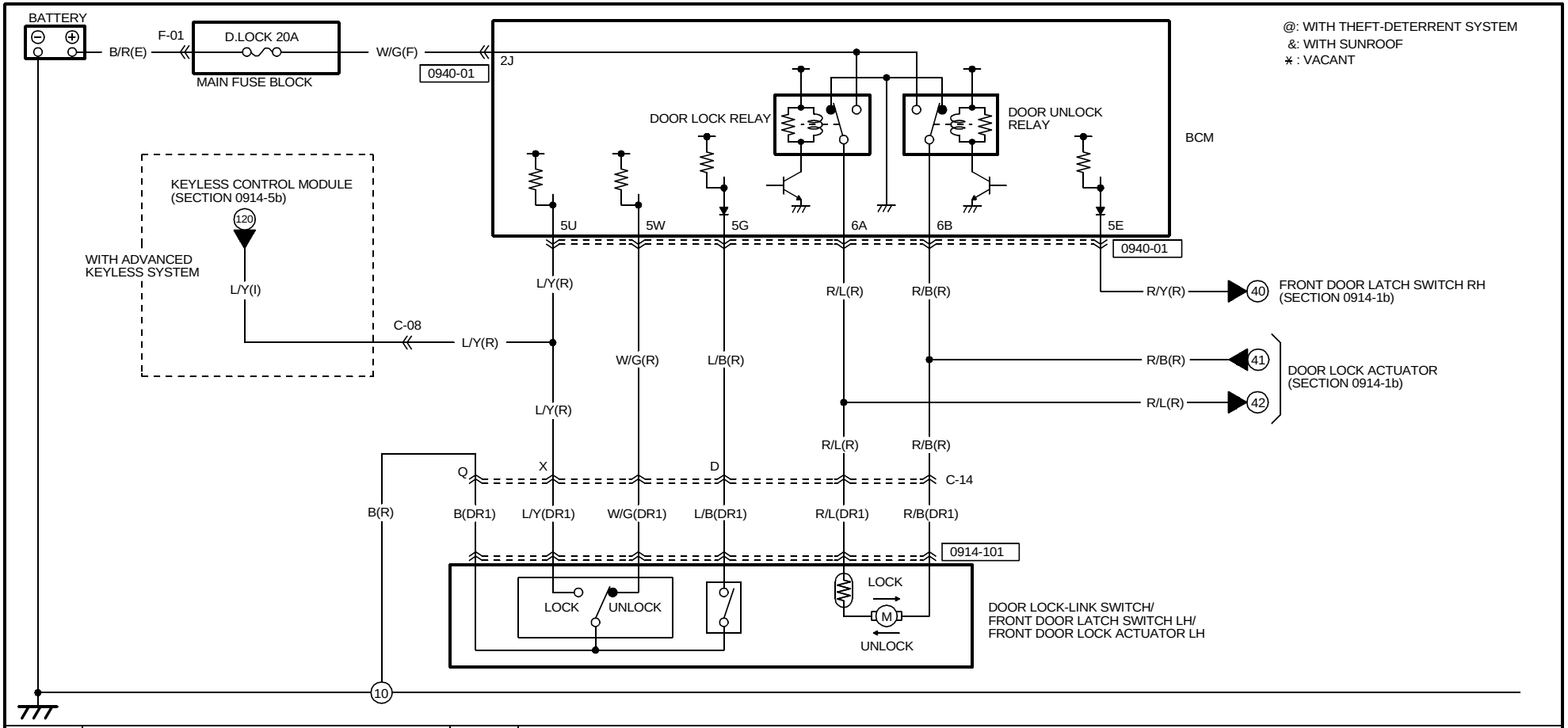

0914-101
DOOR LOCK-LINK SWITCH/
FRONT DOOR LATCH SWITCH LH/
FRONT DOOR LOCK ACTUATOR LH(DR1)

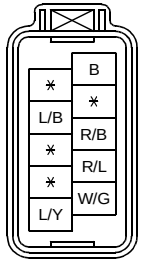

0940-01
BCM

(F)

2K Y/R	2I V/G	2G LG/R	2E ∗	2C ∗	2A L/R
2L GY	2J W/G	2H P/L	2F GY/L	2D GY/V	2B R/G

(R)

5W W/G	5U L/Y	5S ∗	5Q ∗	5O ∗ @B/W	5M R/G	5K BR/W	5I ∗	5G L/B	5E R/Y	5C G/O	5A BR/R
5X GY/R	5V GY/L	5T G/B	5R GY/B	5P ∗	5N ∗ &R/W	5L ∗ @R	5J ∗ @B/W	5H ∗ @V	5F ∗ @LG/R	5D ∗	5B ∗

(R)

6I Y	6G L			6A R/L
6J L/R	6H G/Y	6F ∗		6D ∗	6B R/B

cardiagn.com

HARNESS SYMBOL : (F) (E) (R)

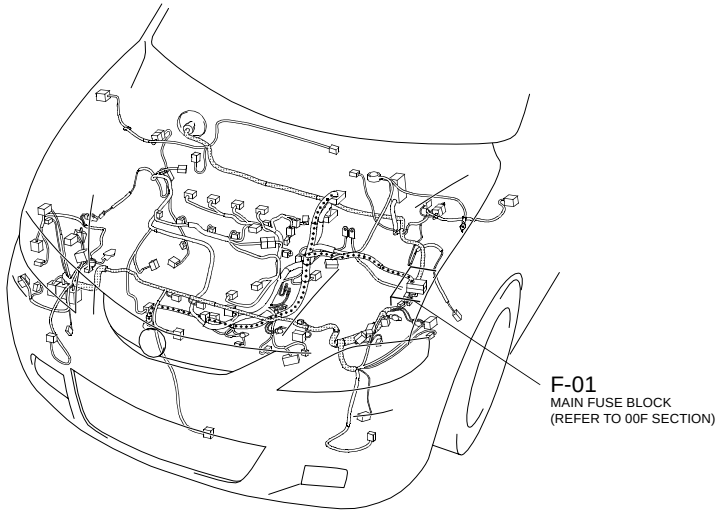

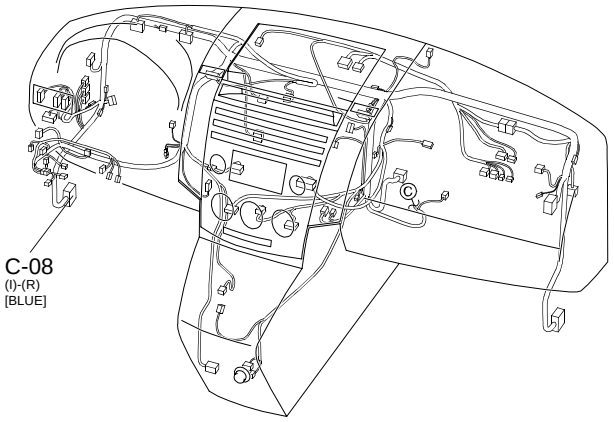

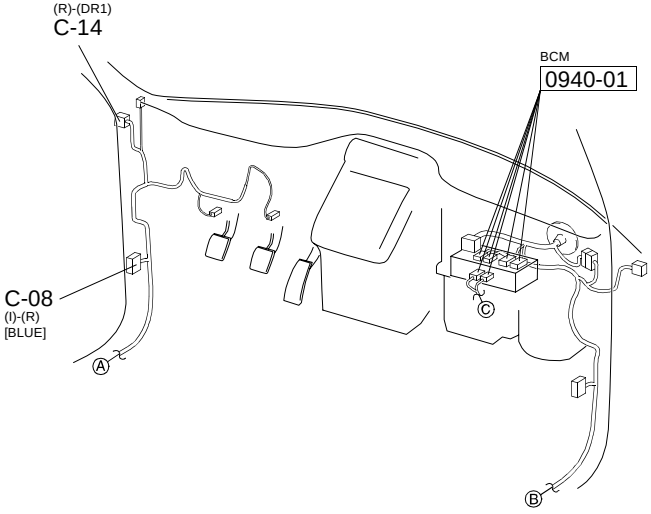

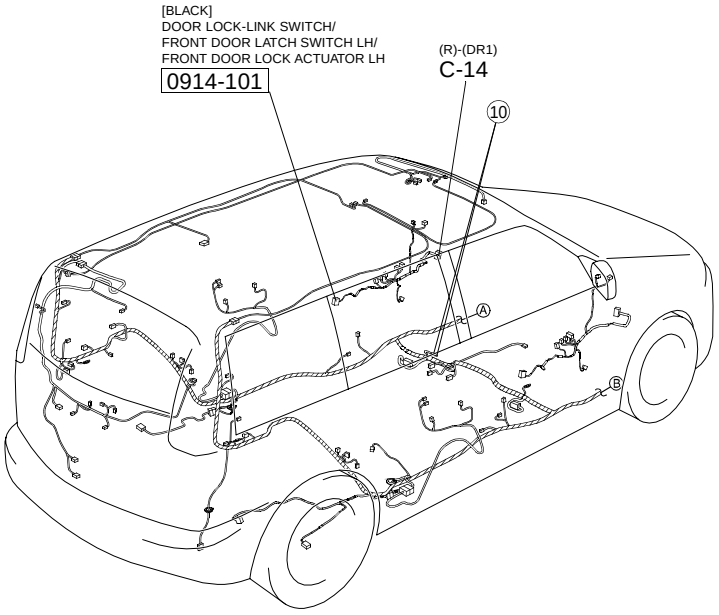

cardiagn.com

POWER DOOR LOCK SYSTEM ~~(WITHOUT DOUBLE LOCKING SYSTEM)~~

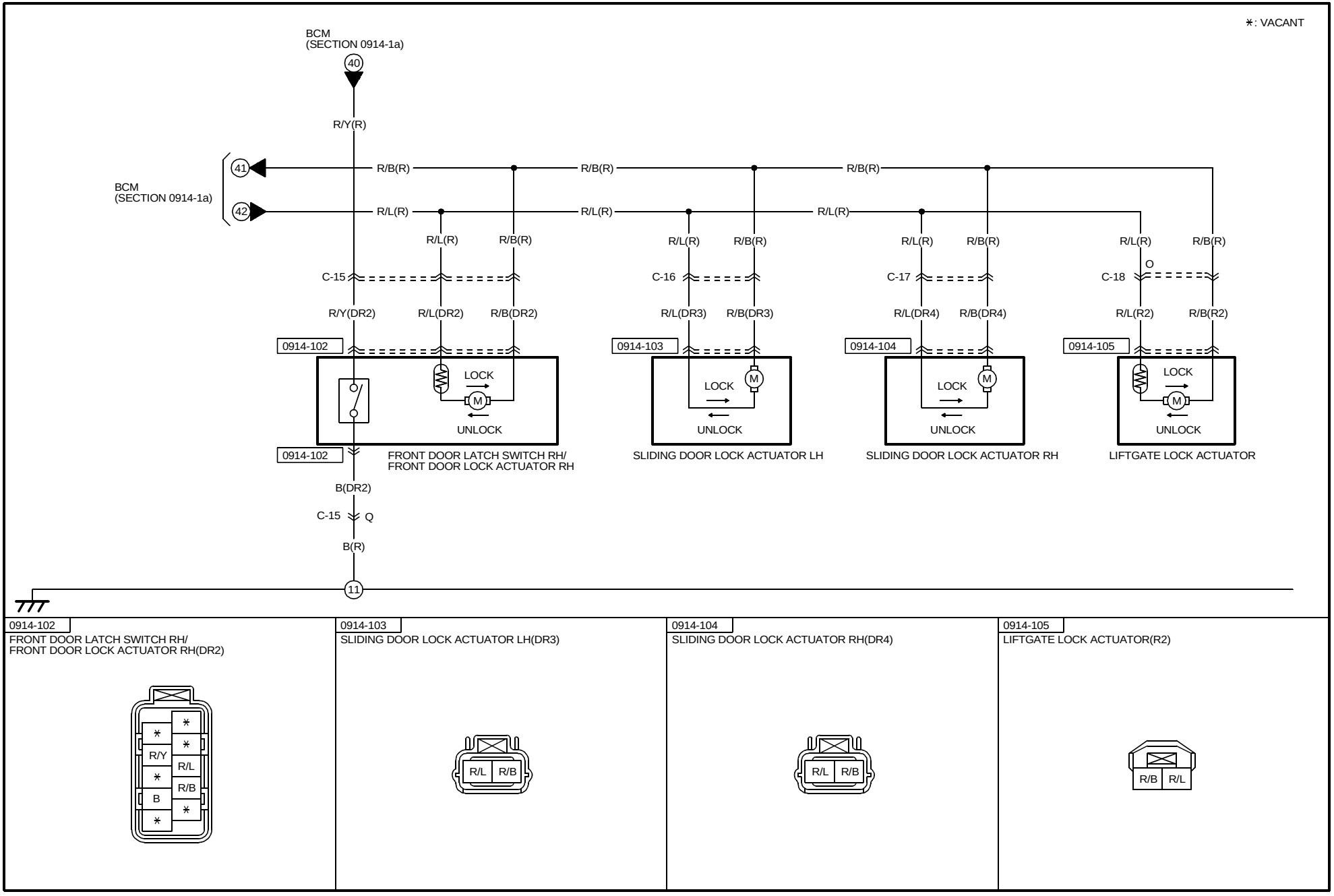

0914-102
FRONT DOOR LATCH SWITCH RH/
FRONT DOOR LOCK ACTUATOR RH(DR2)

0914-103
SLIDING DOOR LOCK ACTUATOR LH(DR3)

0914-104
SLIDING DOOR LOCK ACTUATOR RH(DR4)

0914-105
LIFTGATE LOCK ACTUATOR(R2)

cardiagn.com

HARNESS SYMBOL : (F) (E) (R)

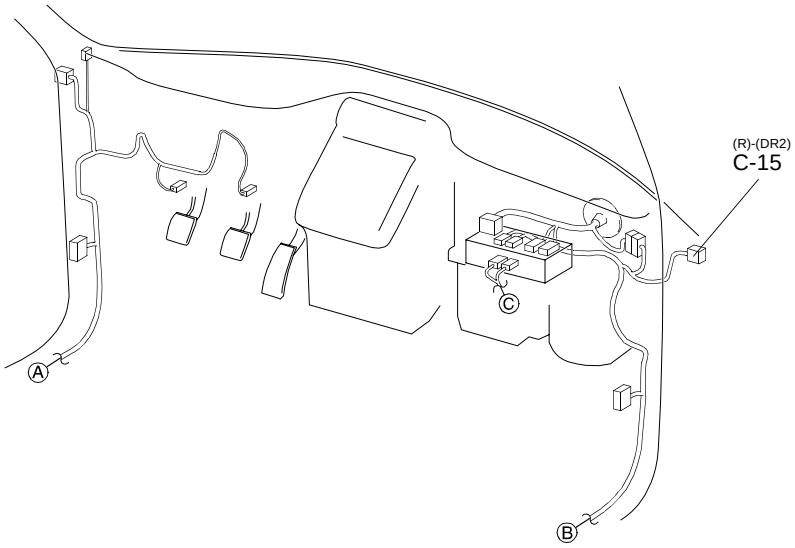

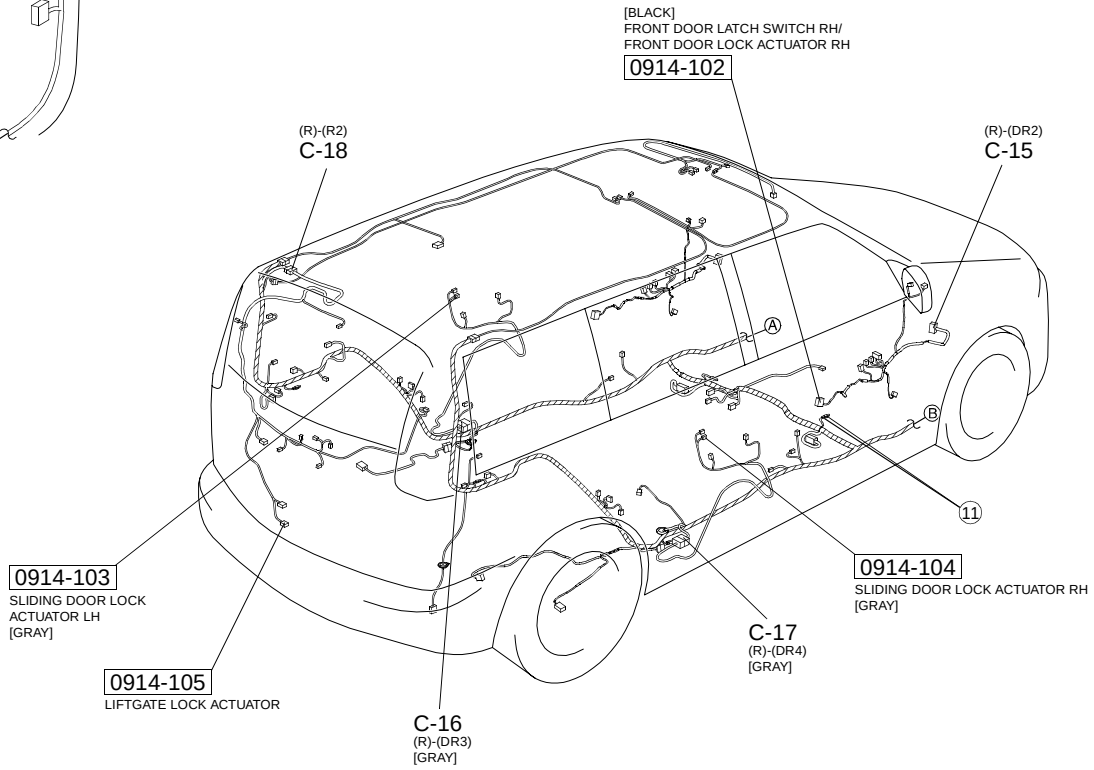

cardiagn.com

POWER DOOR LOCK SYSTEM (WITH DOUBLE LOCKING SYSTEM)

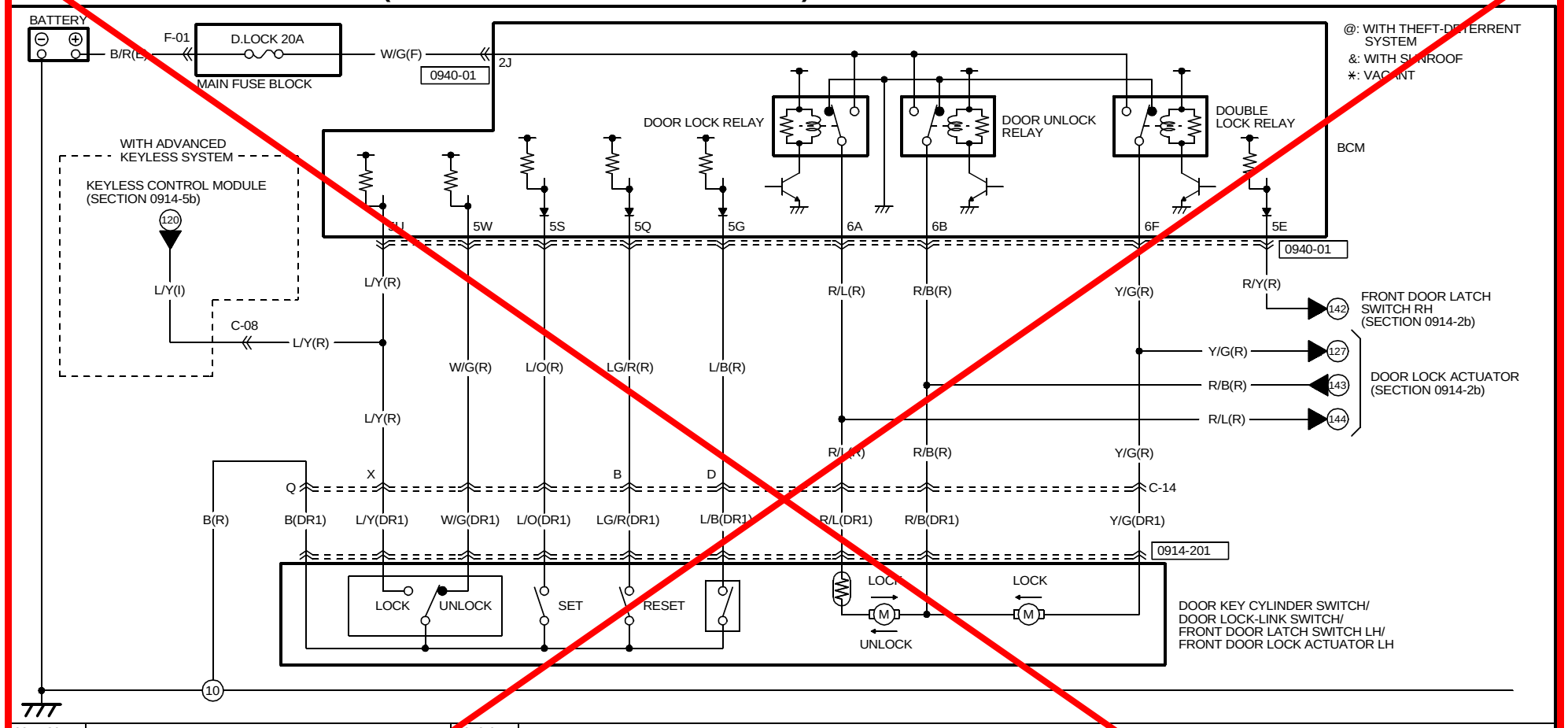

0914-201
DOOR KEY CYLINDER SWITCH/
DOOR LOCK-LINK SWITCH/
FRONT DOOR LATCH SWITCH LH/
FRONT DOOR LOCK ACTUATOR LH(DR1)

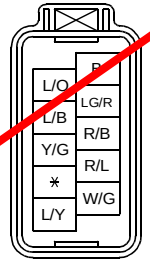

0940-01
BCM

(F)

2K Y/R	2I V/G	2G LG/R	2E *	2C *	2A L/R
2L GY	2J W/G	2H P/L	2F GY/L	2D GY/V	2B R/G

(R)

5W W/G	5U L/Y	5S L/O	5Q LG/R	5O * @B/W	5M R/G	5K BR/W	5I *	5G L/B	5E R/Y	5C G/O	5A BR/R
5X GY/R	5V GY/L	5T G/B	5R GY/B	5P *	5N * &R/W	5L * @R	5J * @B/W	5H * @V	5F * @LG/R	5D *	5B *

(R)

6I Y	6G L			6A R/L
6J L/R	6H G/Y	6F Y/G	6D *	6B R/B

cardiagn.com

HARNESS SYMBOL : (F) (E) (R)

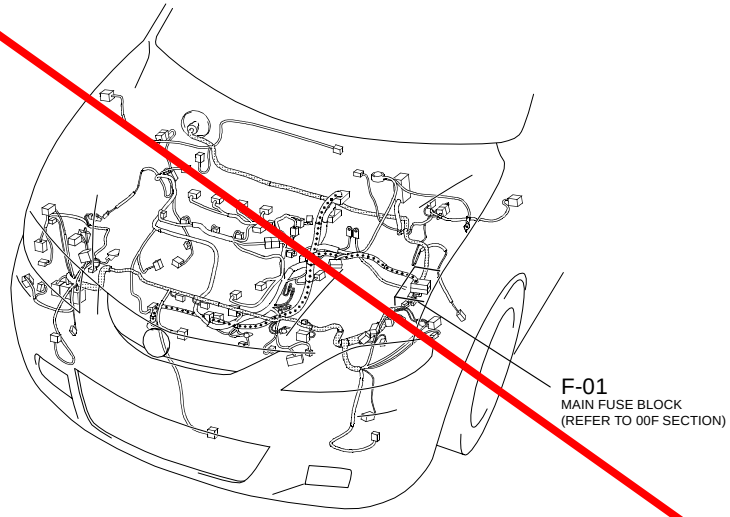

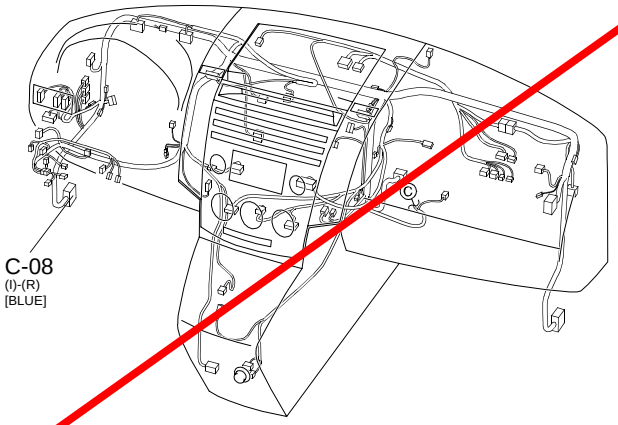

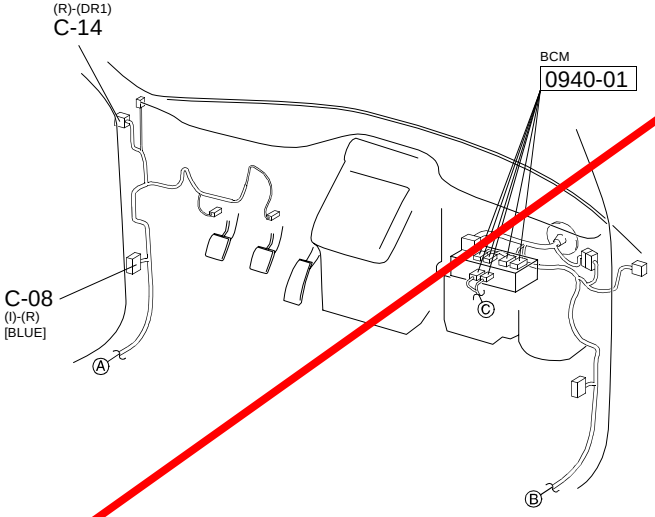

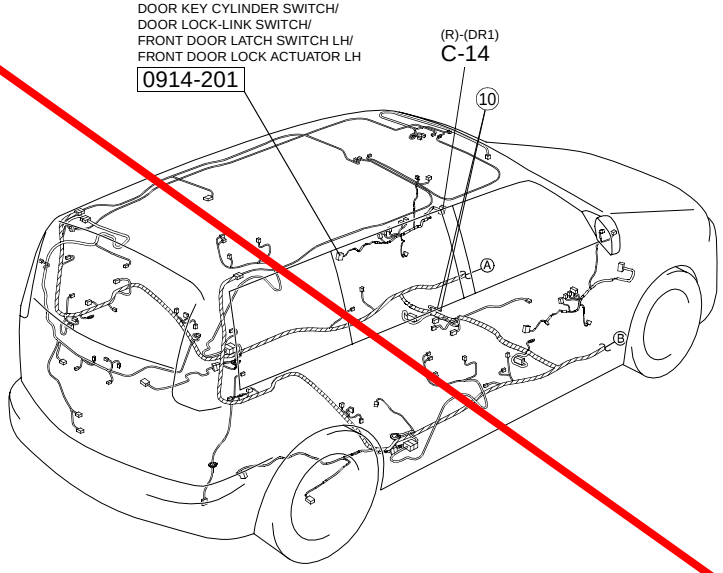

111
cardiagn.com

POWER DOOR LOCK SYSTEM (WITH DOUBLE LOCKING SYSTEM)

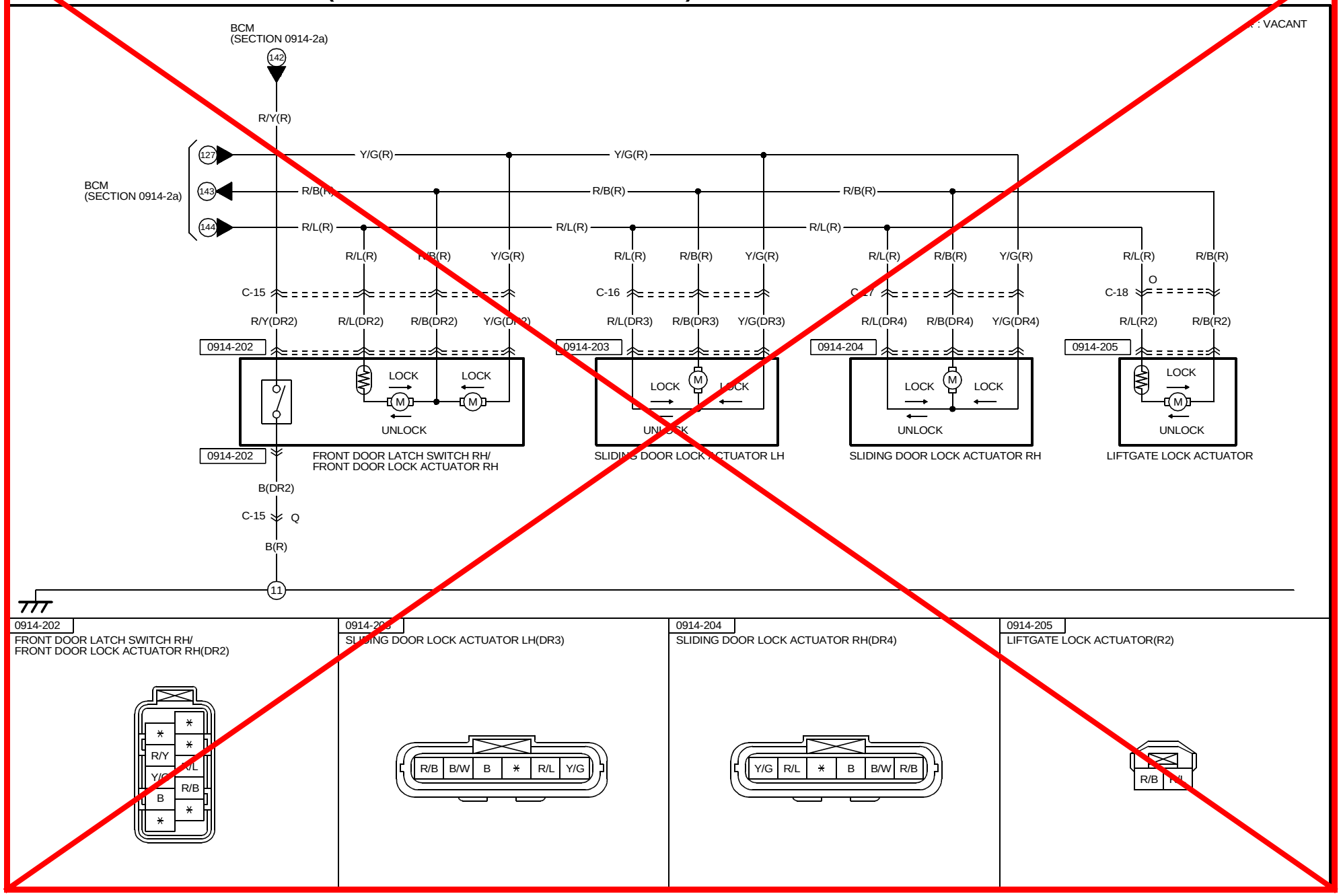

cardiagn.com

HARNESS SYMBOL : (F) (E) (R)

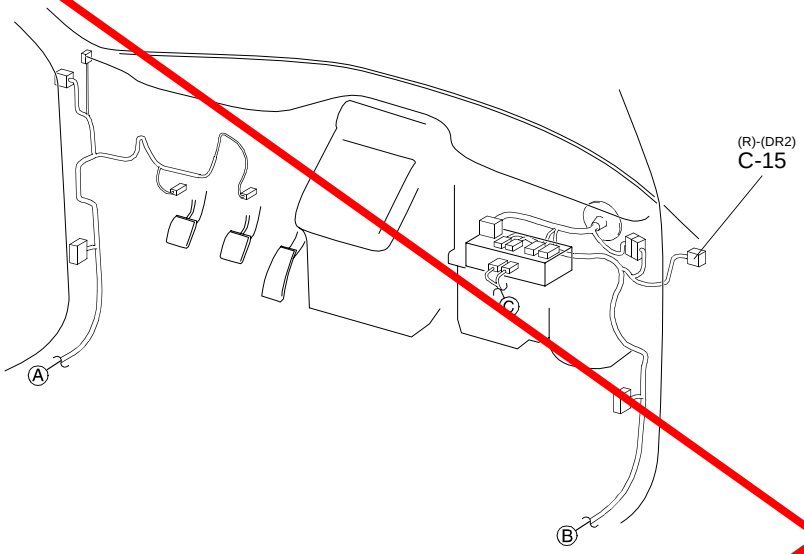

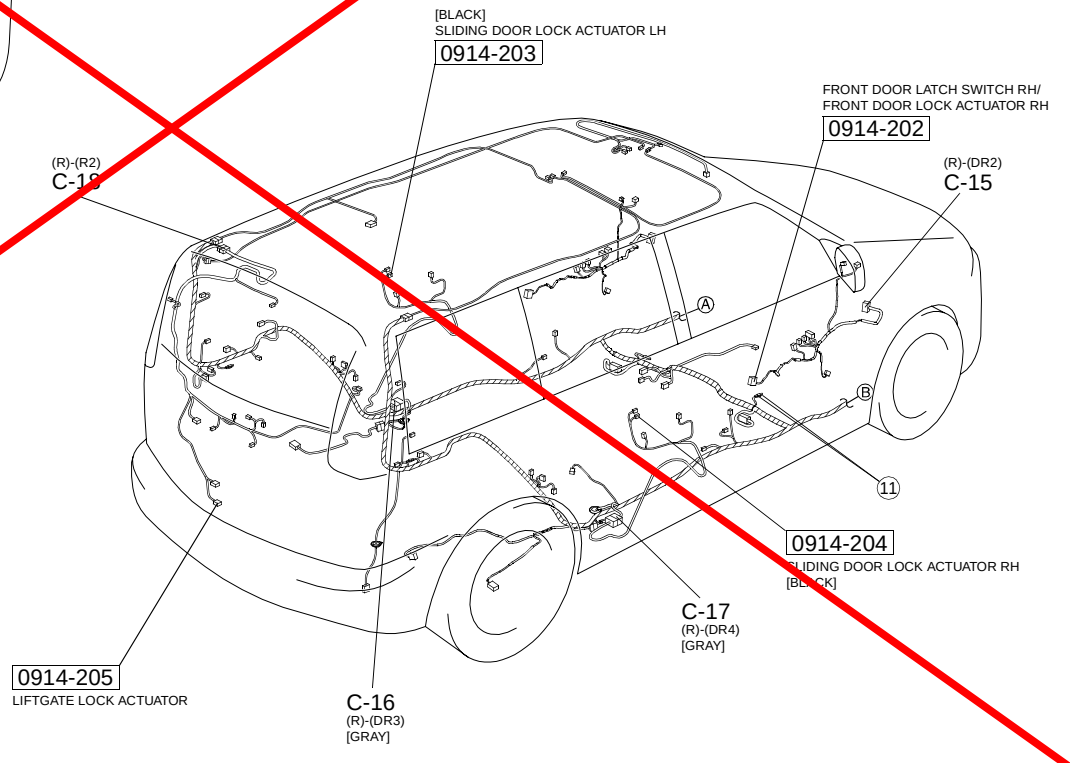

cardiagn.com

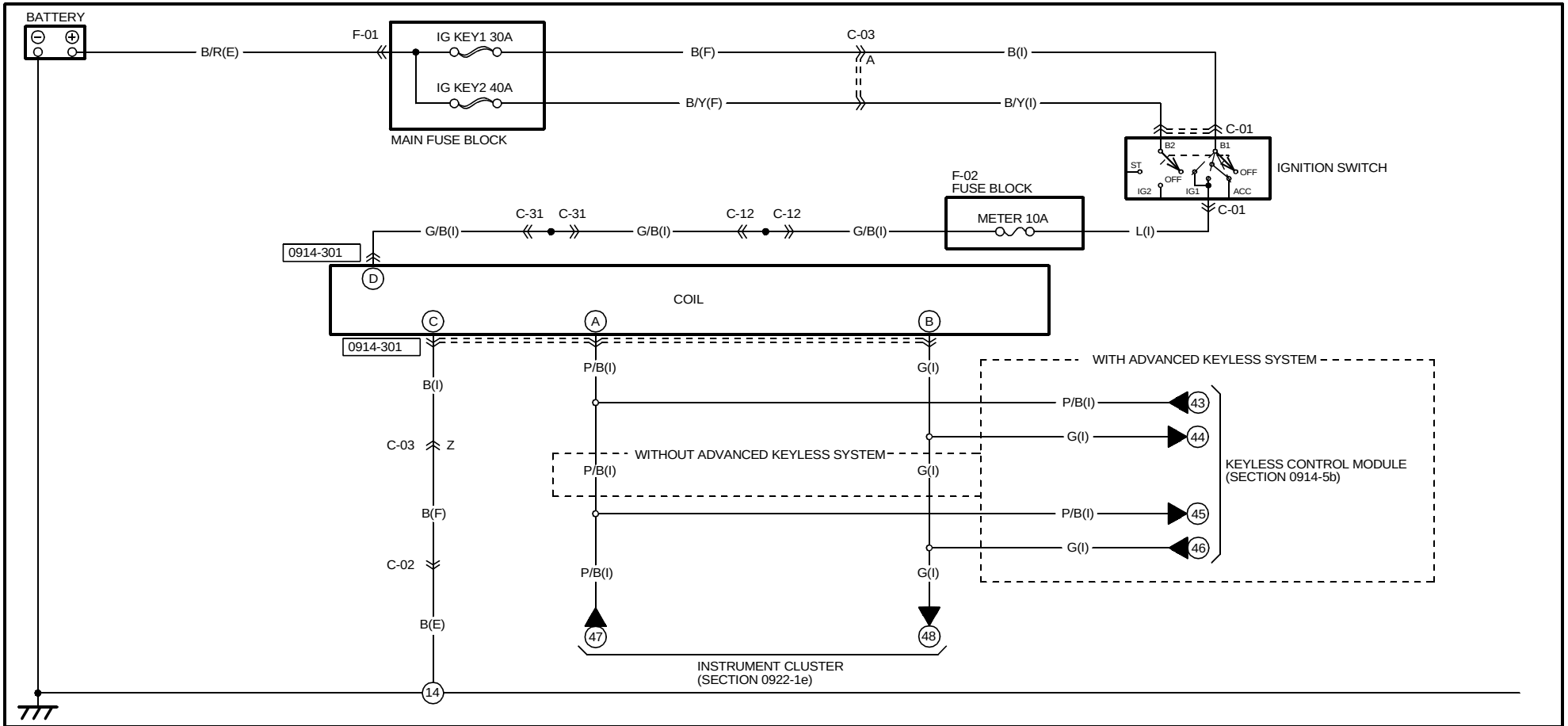

0914-301

COIL(I)

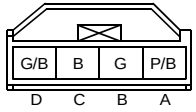

cardiagn.com

HARNESS SYMBOL : (F) (E) (R)

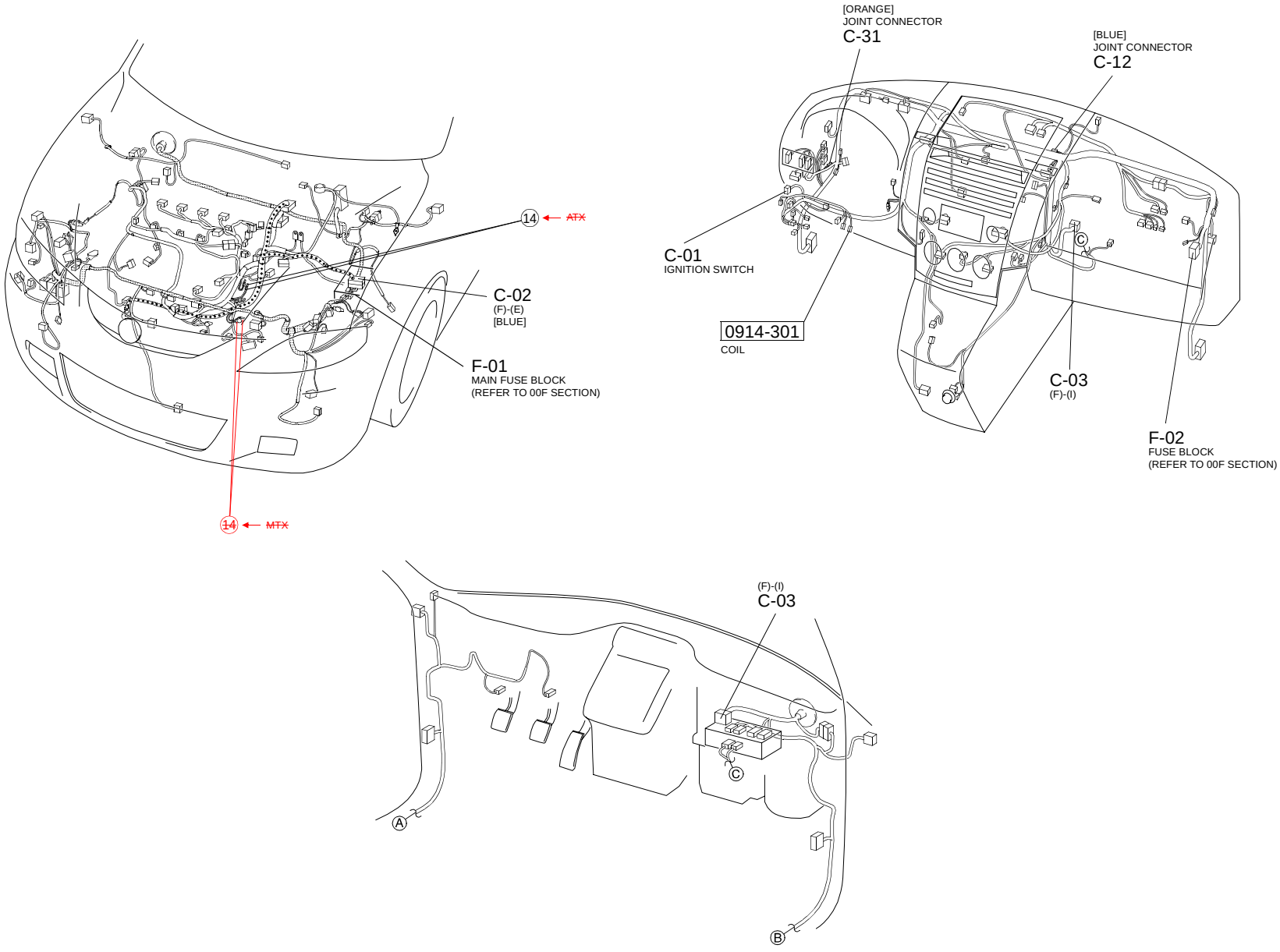

cardiagn.com

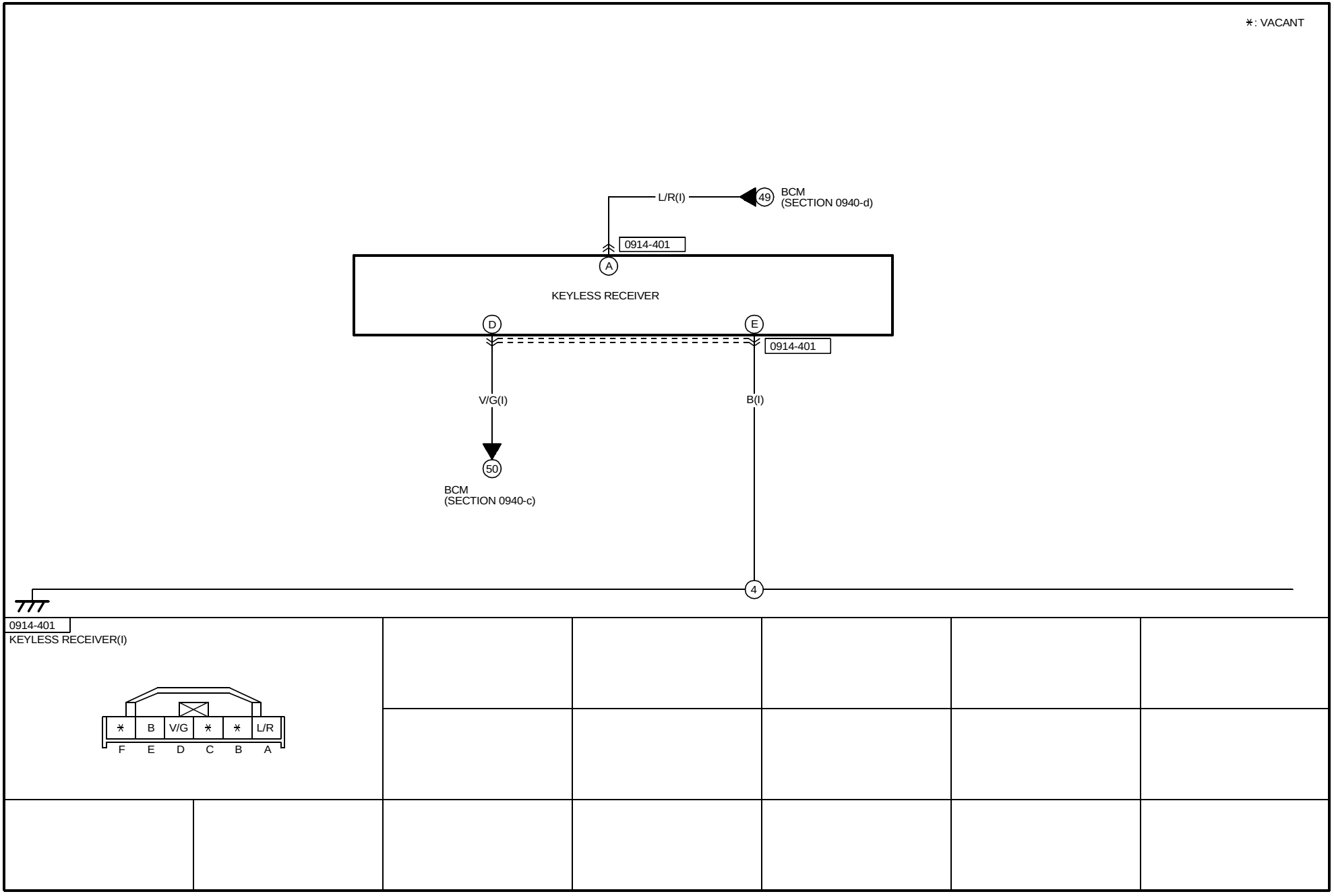

cardiagn.com

HARNESS SYMBOL : (F) (E) (R)

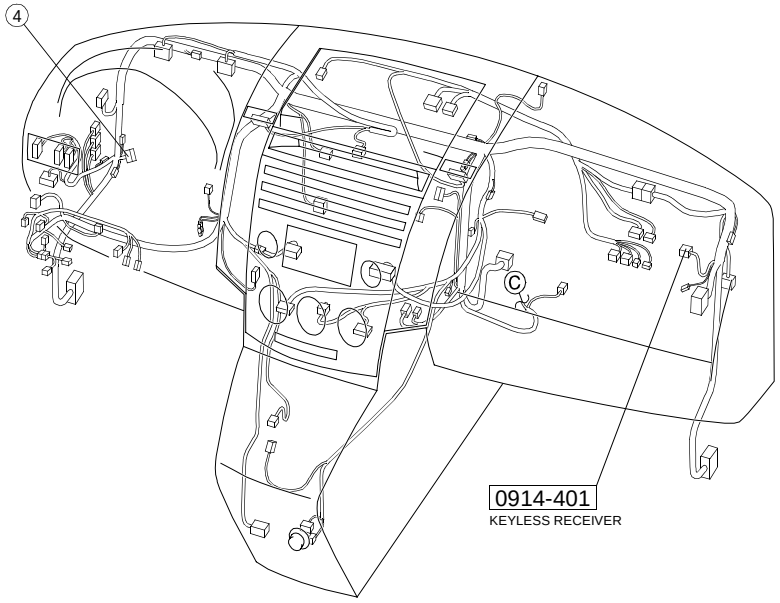

cardiagn.com

KEYLESS ENTRY SYSTEM (WITH ADVANCED KEYLESS SYSTEM)

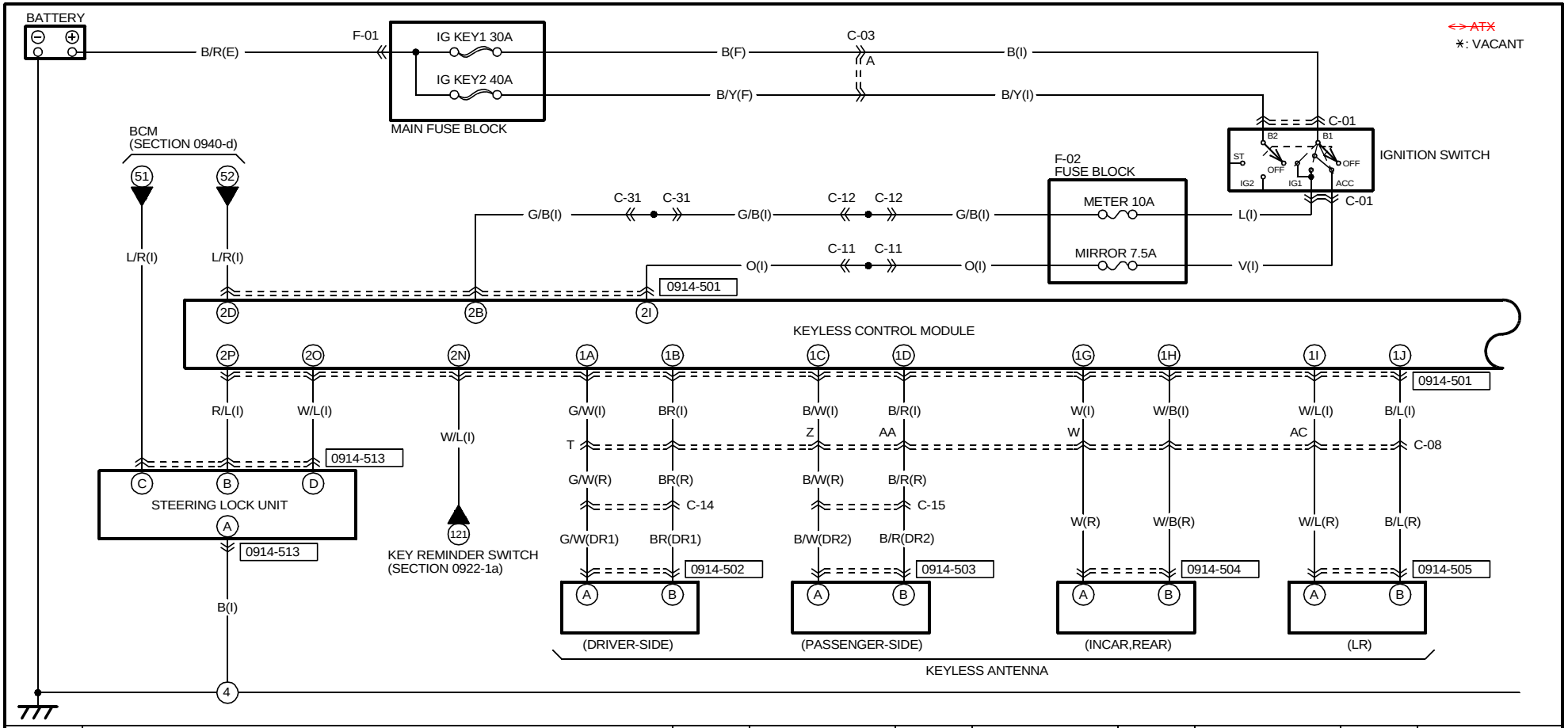

0914-501
KEYLESS CONTROL MODULE(I)

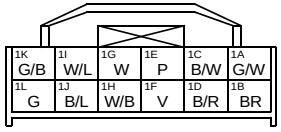

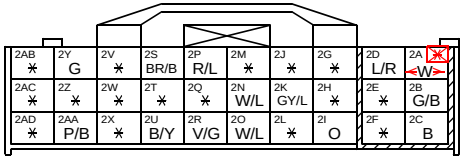

0914-502
KEYLESS ANTENNA
(DRIVER-SIDE)(DR1)

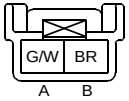

0914-503
KEYLESS ANTENNA
(PASSENGER-SIDE)(DR2)

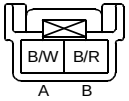

0914-504
KEYLESS ANTENNA
(INCAR,REAR)(R)

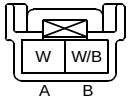

0914-505
KEYLESS ANTENNA(LR)(R)

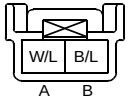

0914-513
STEERING LOCK UNIT(I)

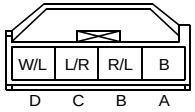

cardiagn.com

HARNESS SYMBOL : (F) (E) (R)

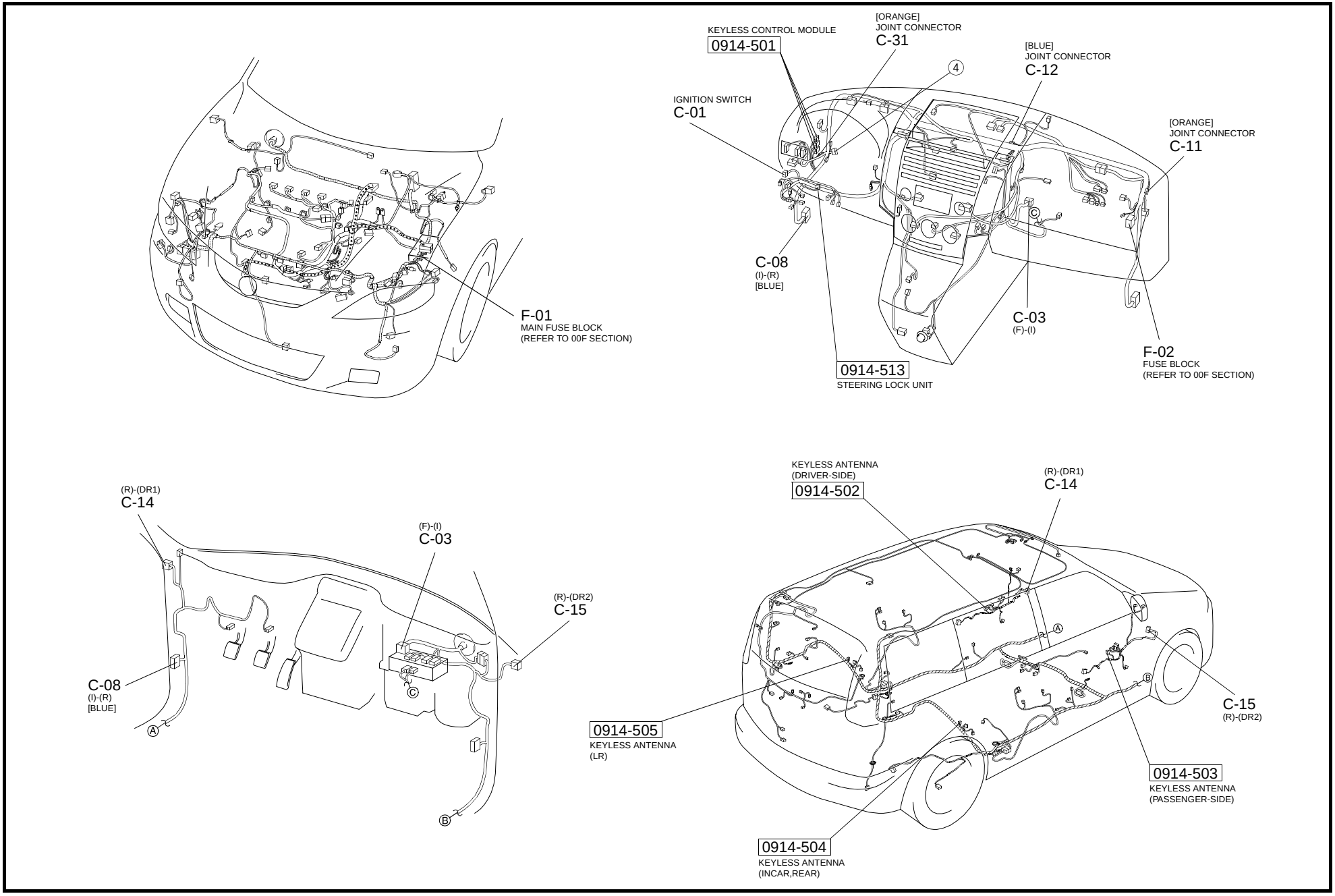

cardiagn.com

KEYLESS ENTRY SYSTEM (WITH ADVANCED KEYLESS SYSTEM)

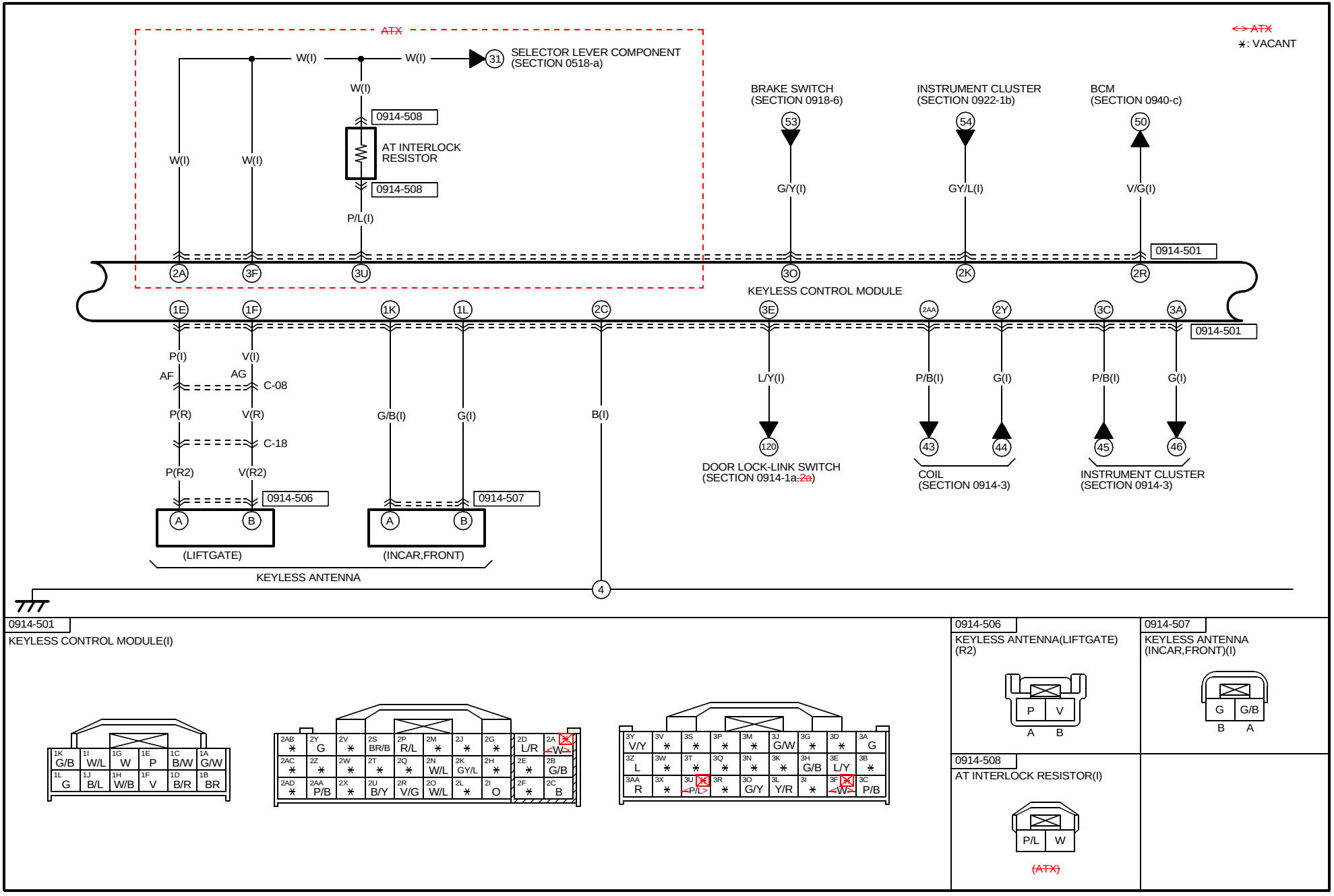

0914-501

KEYLESS CONTROL MODULE(I)

1K G/B	1I W/L	1G W	1E P	1C B/W	1A G/W
1L G	1J B/L	1H W/B	1F V	1D B/R	1B BR

2AB *	2Y G	2V *	2S BR/B	2P R/L	2M *	2J *	2G *	2D L/R	2A ~~W~~
2AC *	2Z *	2W *	2T *	2Q *	2N W/L	2K GY/L	2H *	2E *	2B G/B
2AD *	2AA P/B	2X *	2U B/Y	2R V/G	2O W/L	2L *	2I O	2F *	2C B

3Y V/Y	3V *	3S *	3P *	3M *	3J G/W	3G *	3D *	3A G
3Z L	3W *	3T *	3Q *	3N *	3K *	3H G/B	3E L/Y	3B *
3AA R	3X *	3U ~~P/L~~	3R *	3O G/Y	3L Y/R	3I *	3F ~~W~~	3C P/B

0914-506

KEYLESS ANTENNA(LIFTGATE)
(R2)

P	V
A	B

0914-507

KEYLESS ANTENNA
(INCAR,FRONT)(I)

G	G/B
B	A

0914-508

AT INTERLOCK RESISTOR(I)

P/L	W

~~(ATX)~~

cardiagn.com

HARNESS SYMBOL : (F) (E) (R)

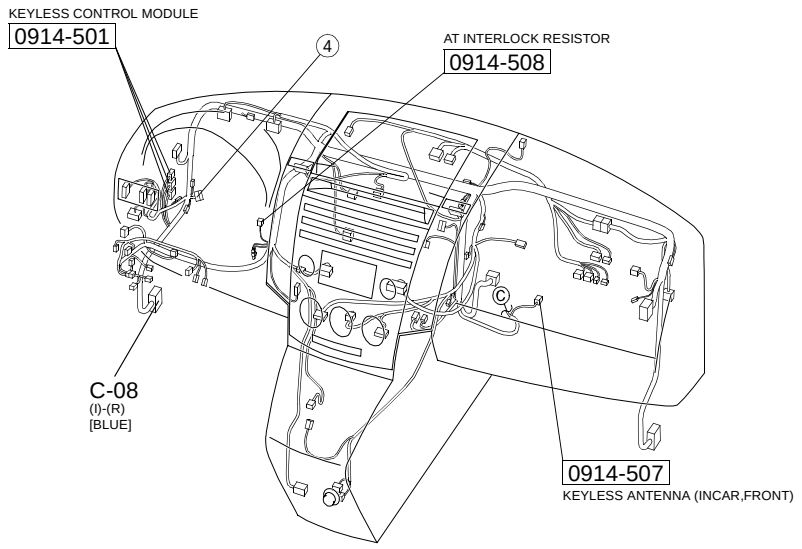

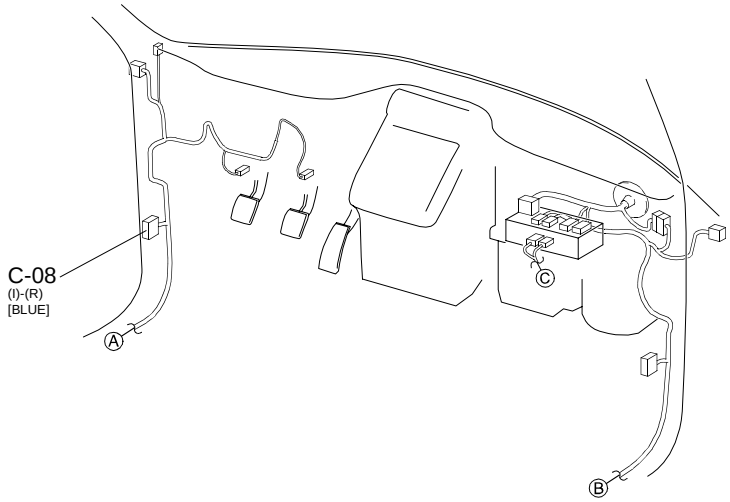

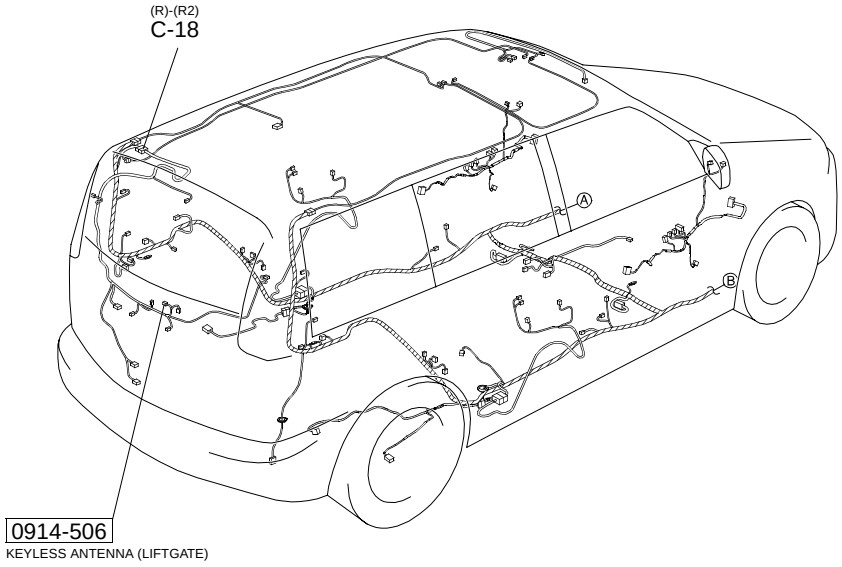

cardiagn.com

KEYLESS ENTRY SYSTEM (WITH ADVANCED KEYLESS SYSTEM)

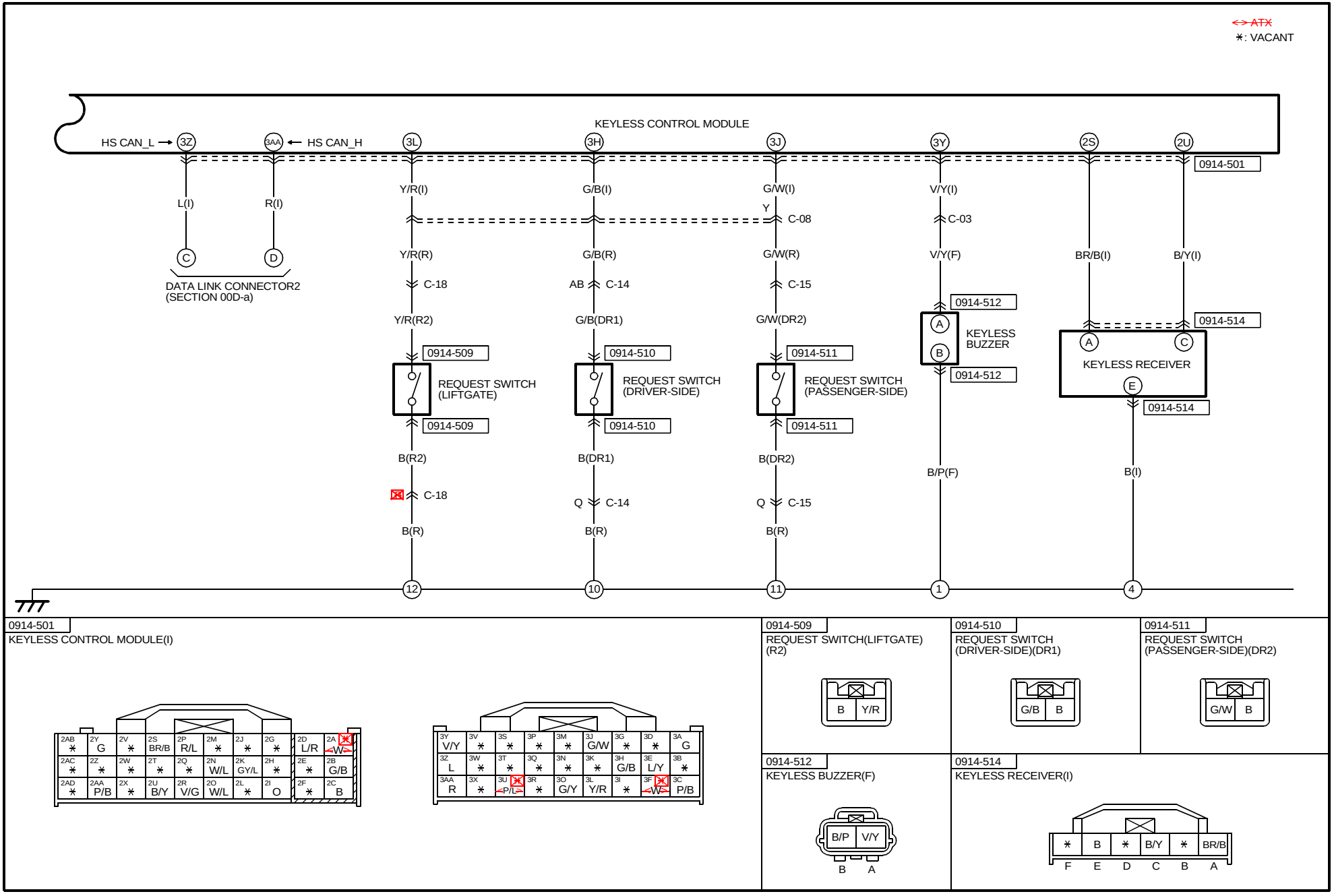

0914-501
KEYLESS CONTROL MODULE(I)

0914-509
REQUEST SWITCH(LIFTGATE)
(R2)

0914-510
REQUEST SWITCH
(DRIVER-SIDE)(DR1)

0914-511
REQUEST SWITCH
(PASSENGER-SIDE)(DR2)

0914-512
KEYLESS BUZZER(F)

0914-514
KEYLESS RECEIVER(I)

cardiagn.com

HARNESS SYMBOL : (F) (E) (R)

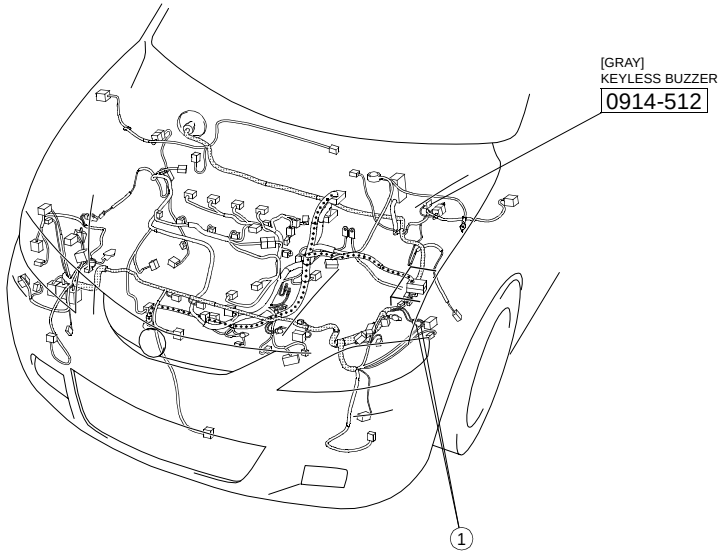

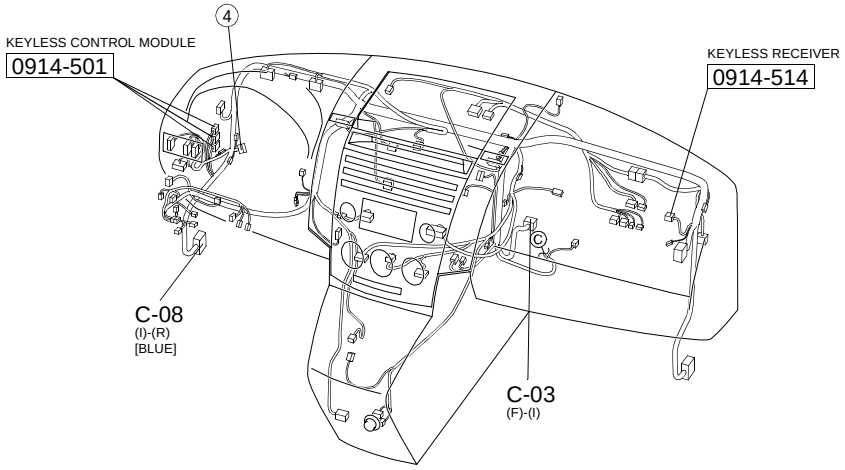

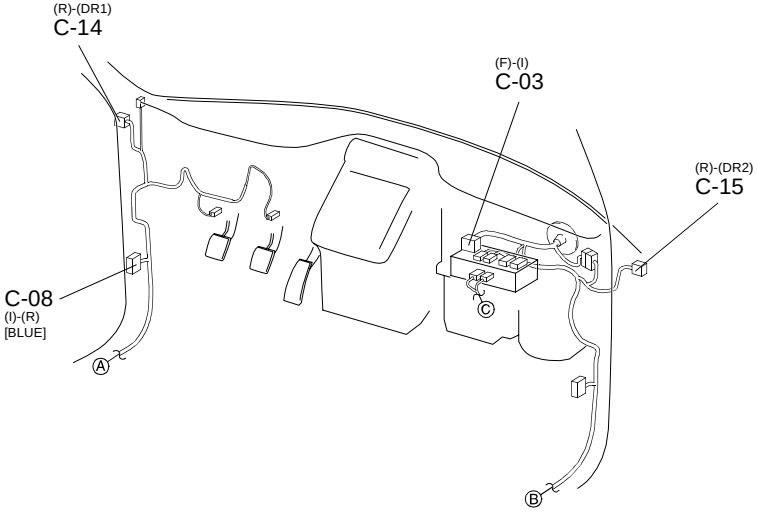

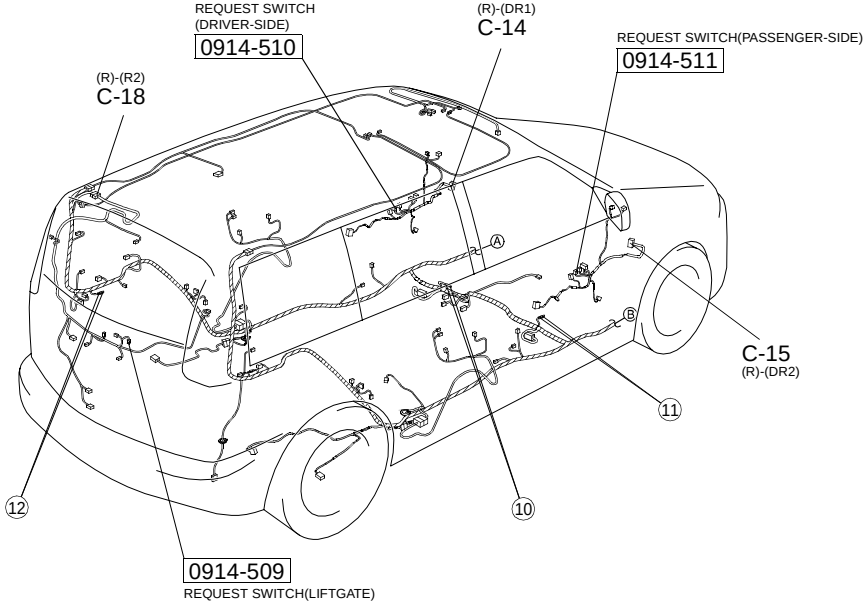

cardiagn.com

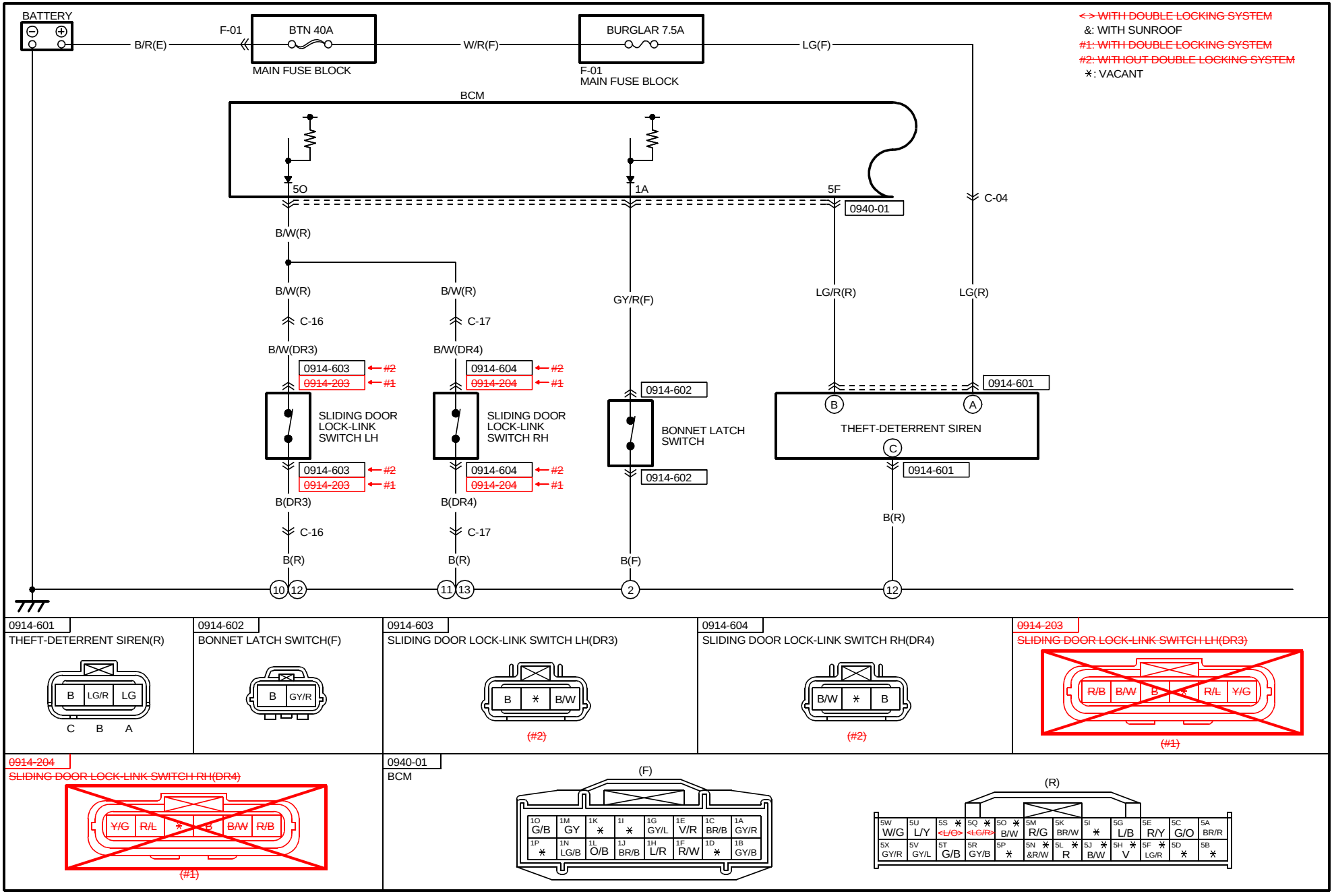

cardiagn.com

HARNESS SYMBOL : (F) (E) (R)

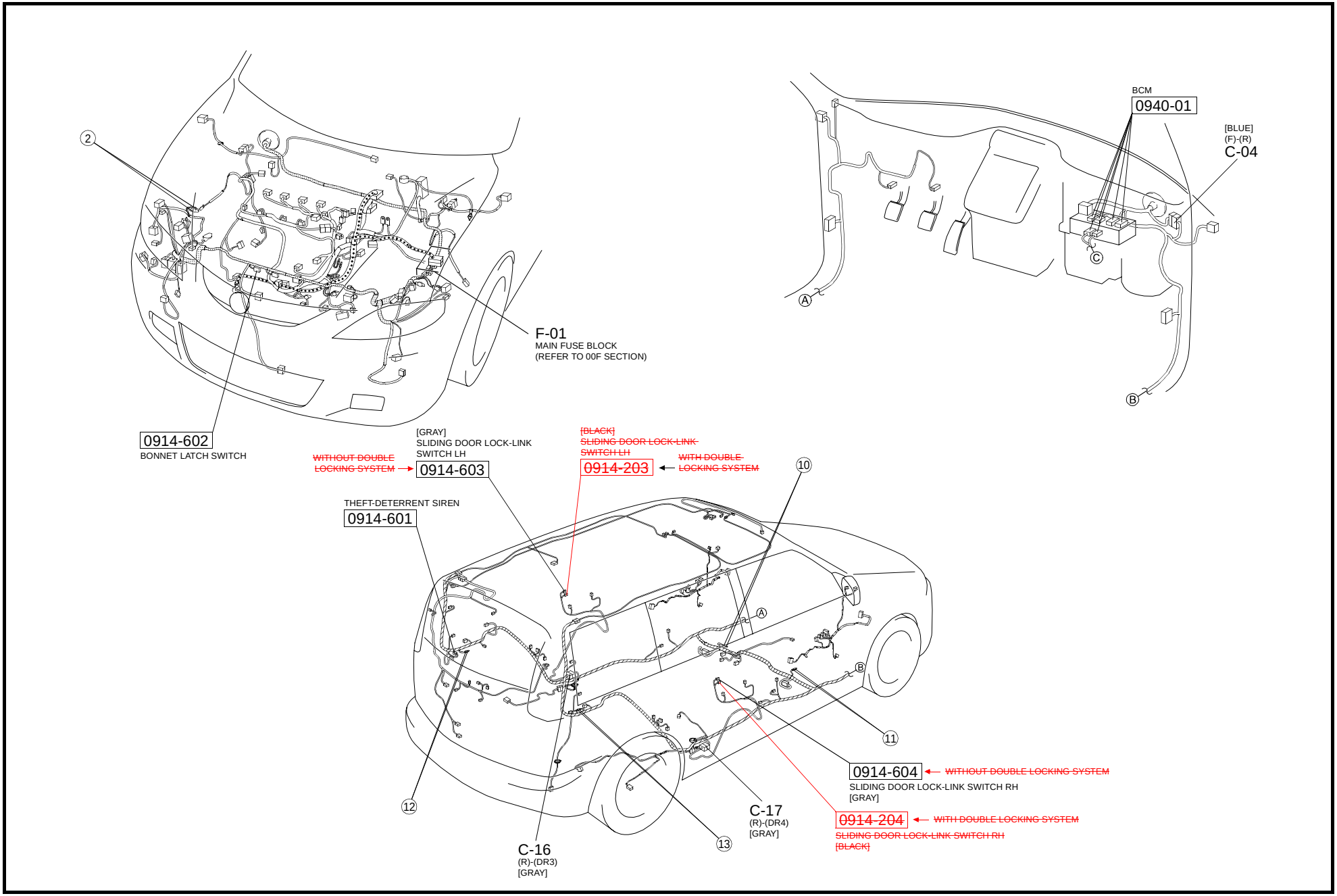

cardiagn.com

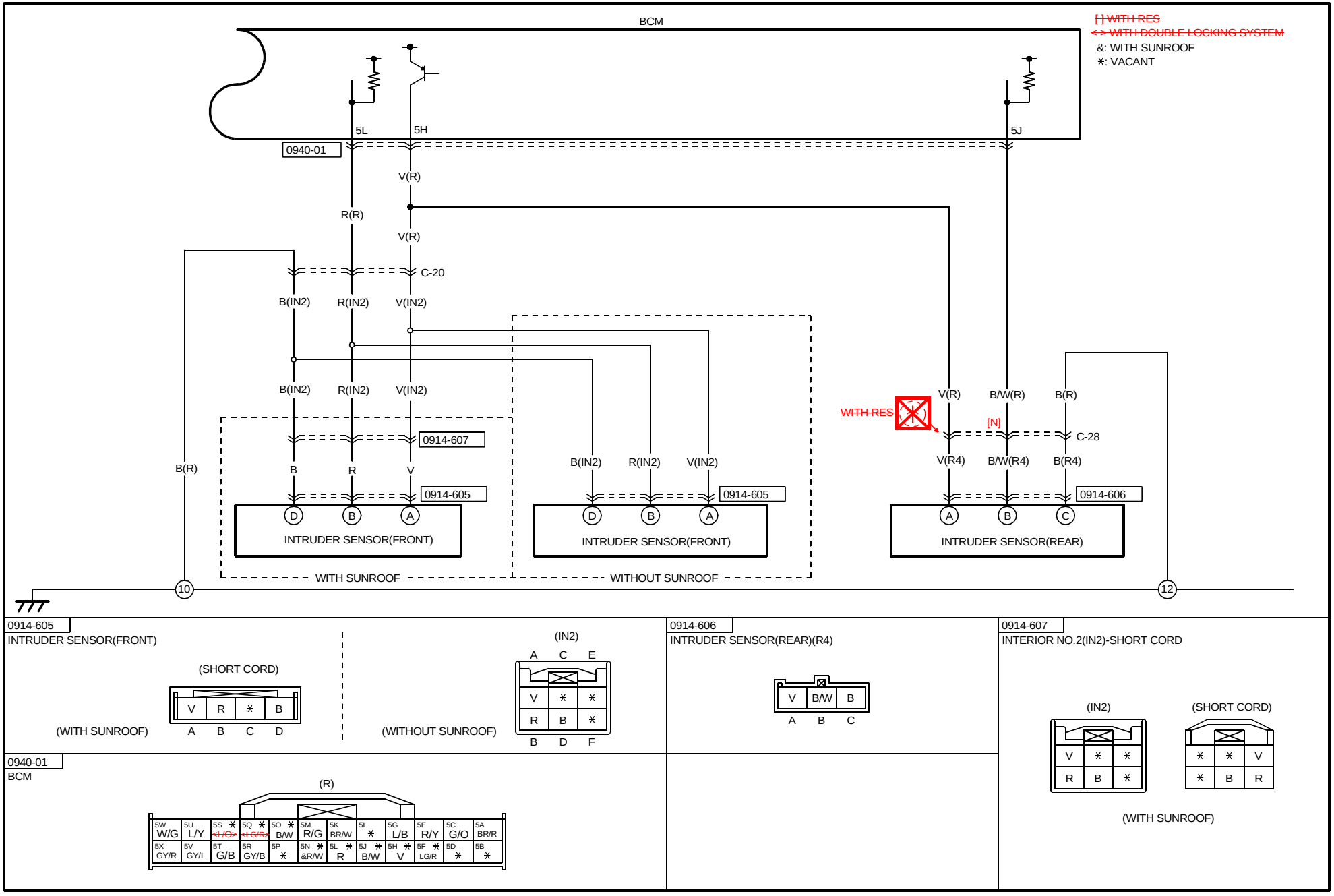

cardiagn.com

HARNESS SYMBOL : (F) (E) (R)

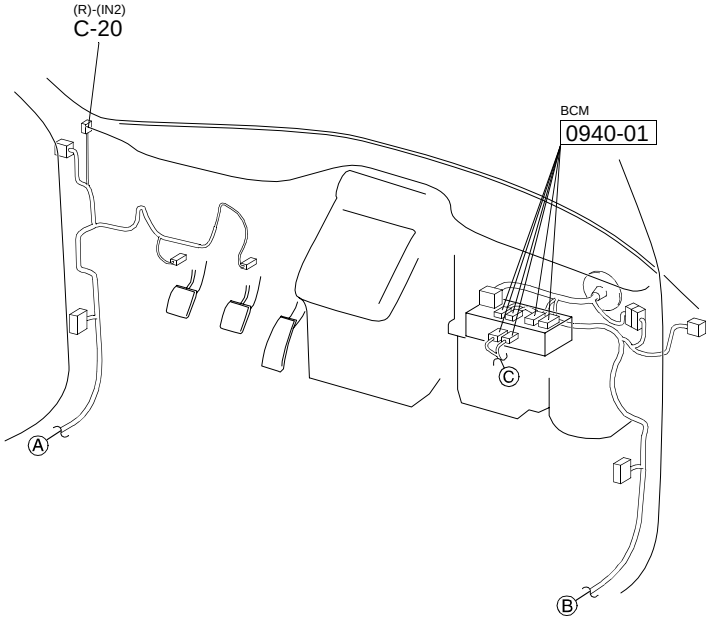

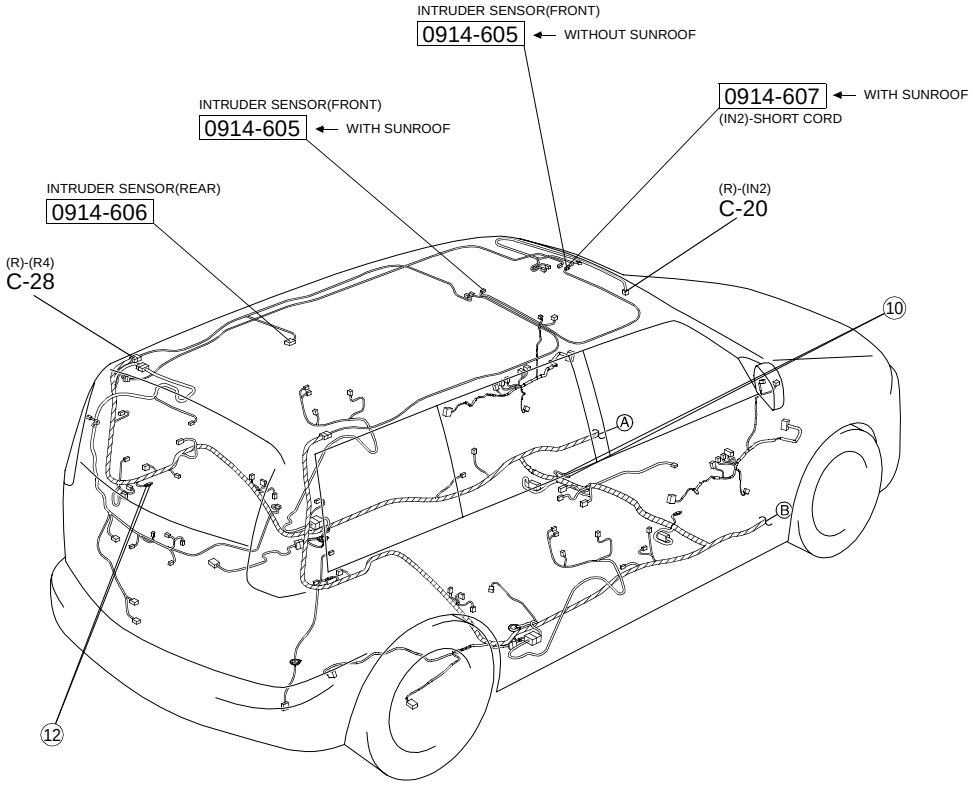

cardiagn.com

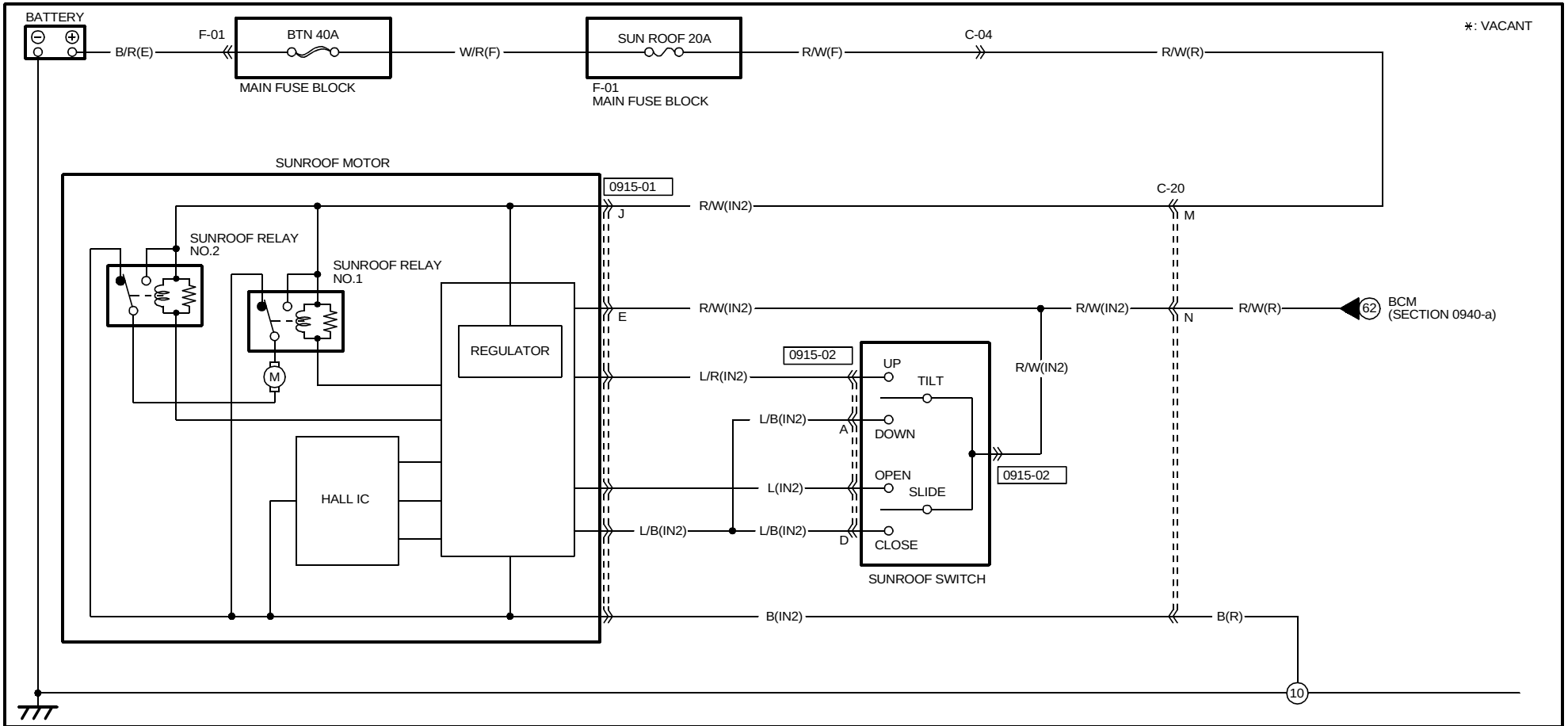

0915-01

SUNROOF MOTOR(IN2)

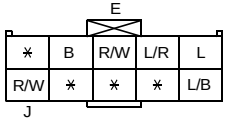

0915-02

SUNROOF SWITCH(IN2)

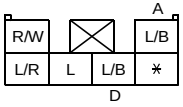

cardiagn.com

HARNESS SYMBOL : (F) (E) (R)

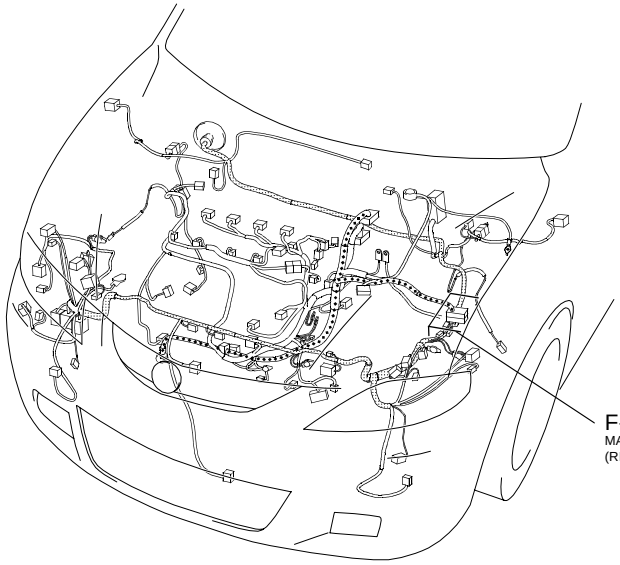

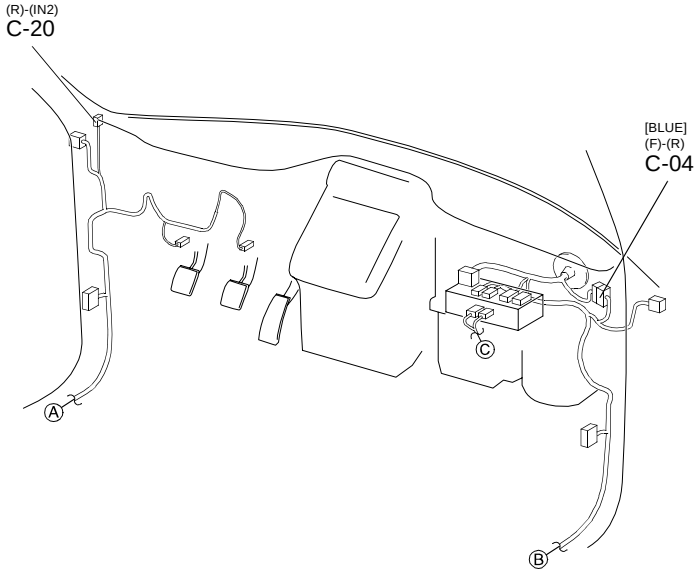

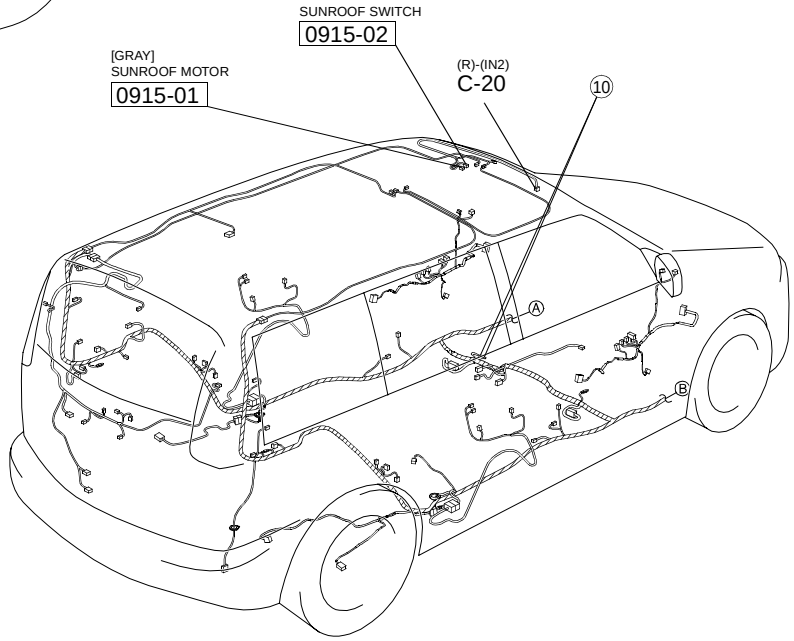

cardiagn.com

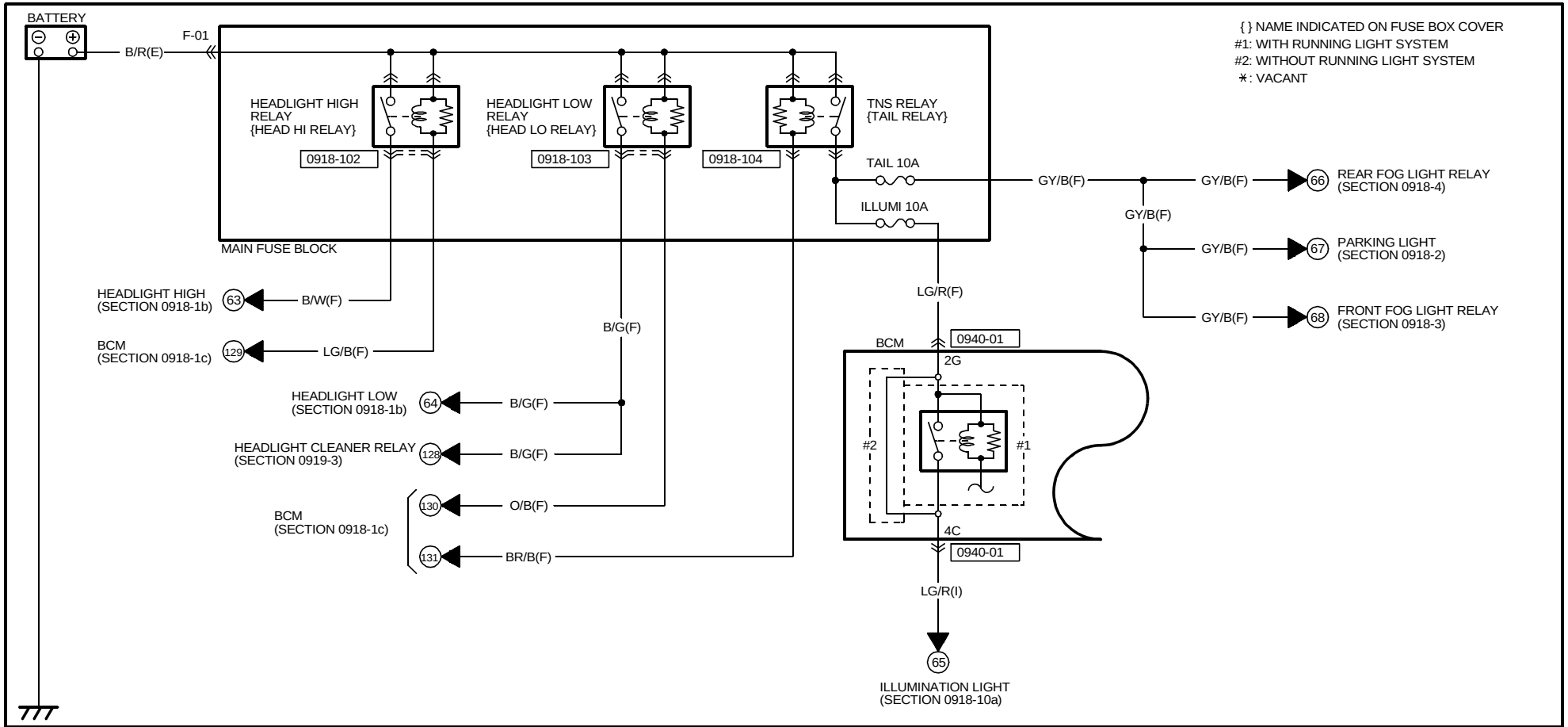

0918-102
HEADLIGHT HIGH RELAY(F)

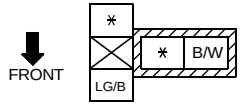

NOTE:SEEN FROM TERMINAL SIDE

0918-103
HEADLIGHT LOW RELAY(F)

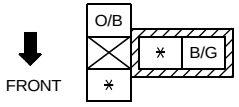

NOTE:SEEN FROM TERMINAL SIDE

0918-104
TNS RELAY(F)

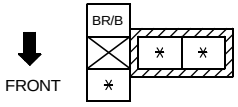

NOTE:SEEN FROM TERMINAL SIDE

0940-01
BCM

(F)

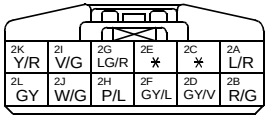

(I)

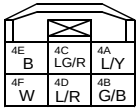

cardiagn.com

HARNESS SYMBOL : (F) (E) (R)

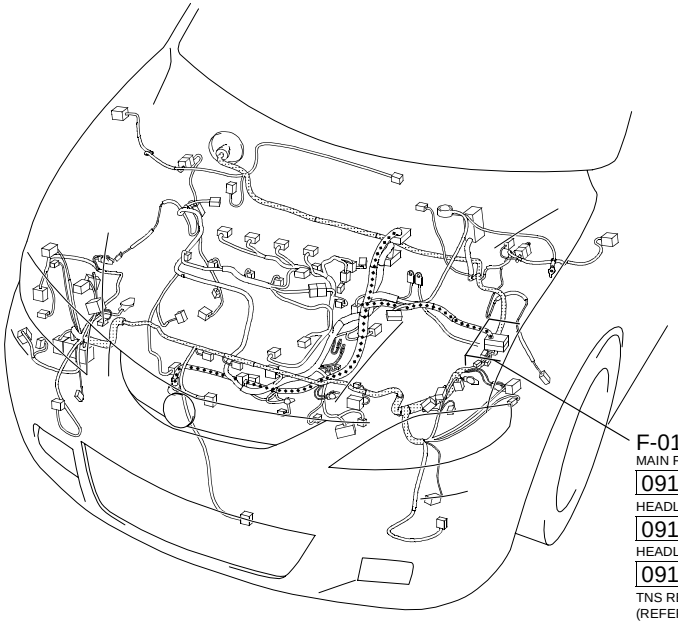

F-01
MAIN FUSE BLOCK
0918-102
HEADLIGHT HIGH RELAY
0918-103
HEADLIGHT LOW RELAY
0918-104
TNS RELAY
(REFER TO 00F SECTION)

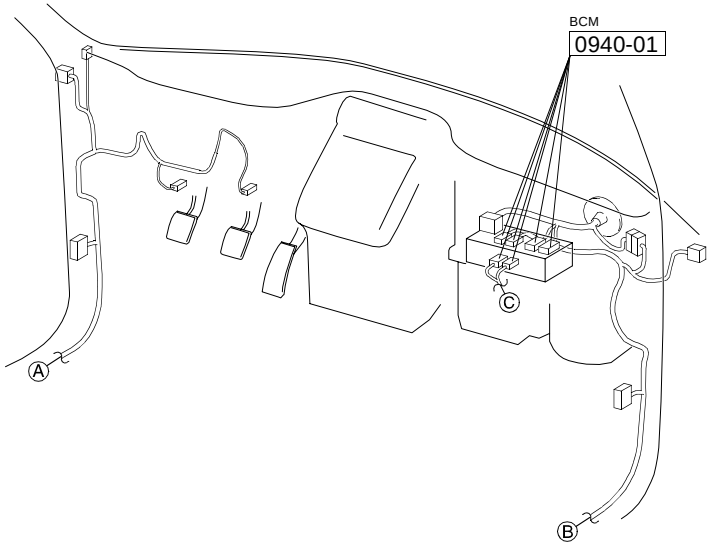

cardiagn.com

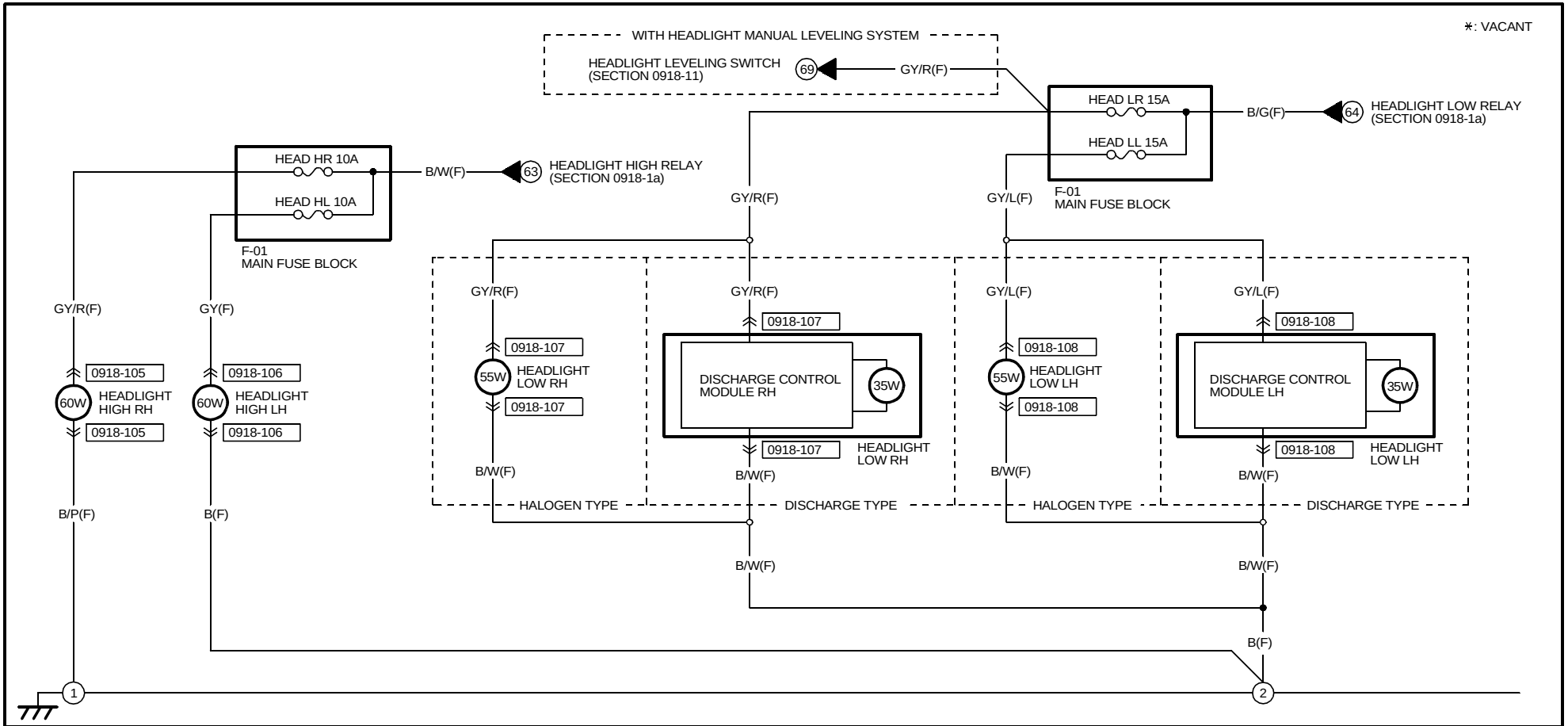

0918-105	0918-106	0918-107	0918-108
HEADLIGHT HIGH RH(F)	HEADLIGHT HIGH LH(F)	HEADLIGHT LOW RH(F)	HEADLIGHT LOW LH(F)
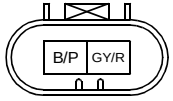	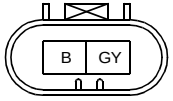	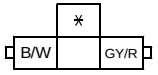 (HALOGEN TYPE) (DISCHARGE TYPE)	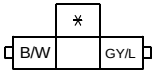 (HALOGEN TYPE) (DISCHARGE TYPE)

cardiagn.com

HARNESS SYMBOL : (F) (E) (R)

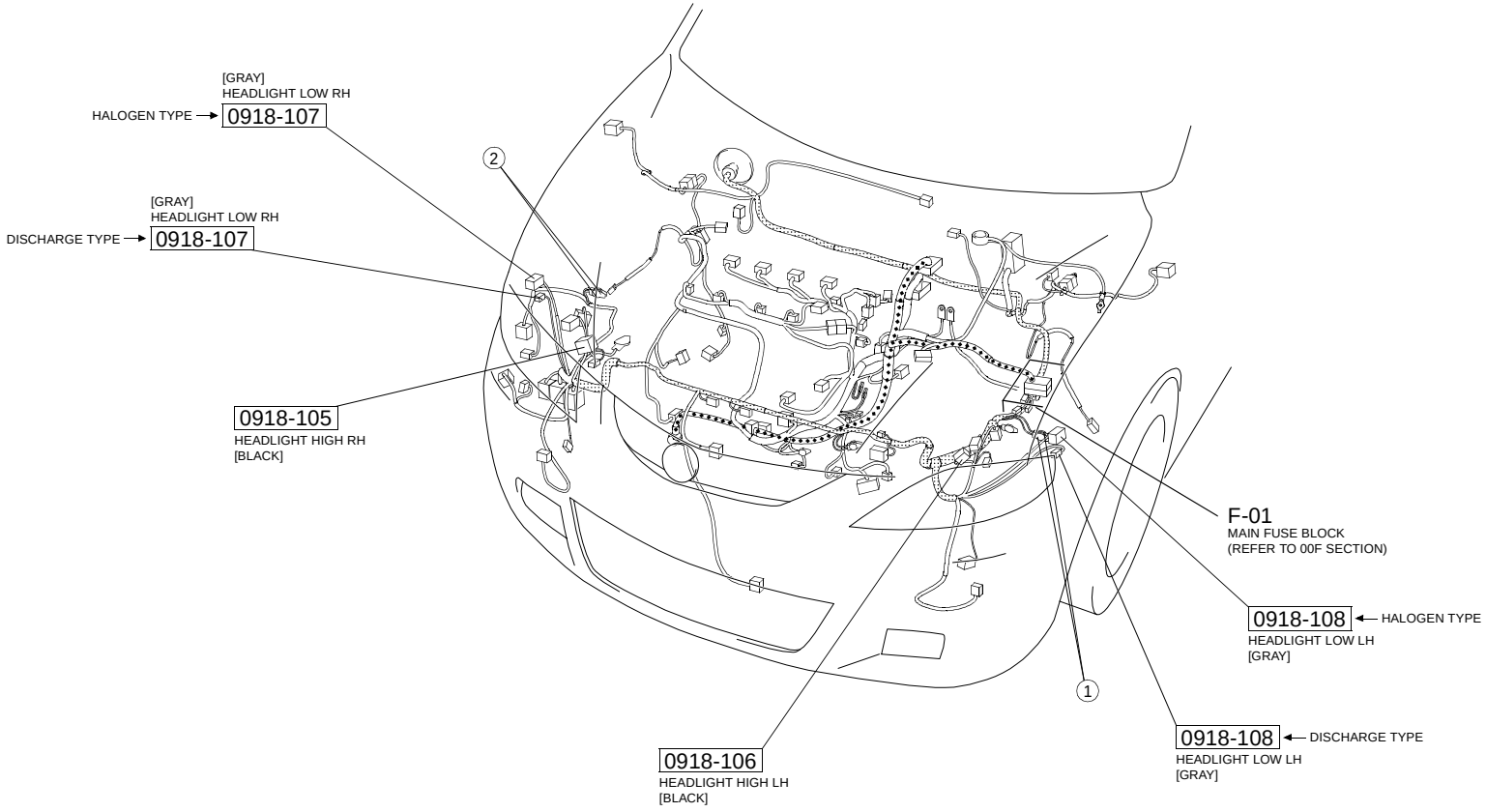

cardiagn.com

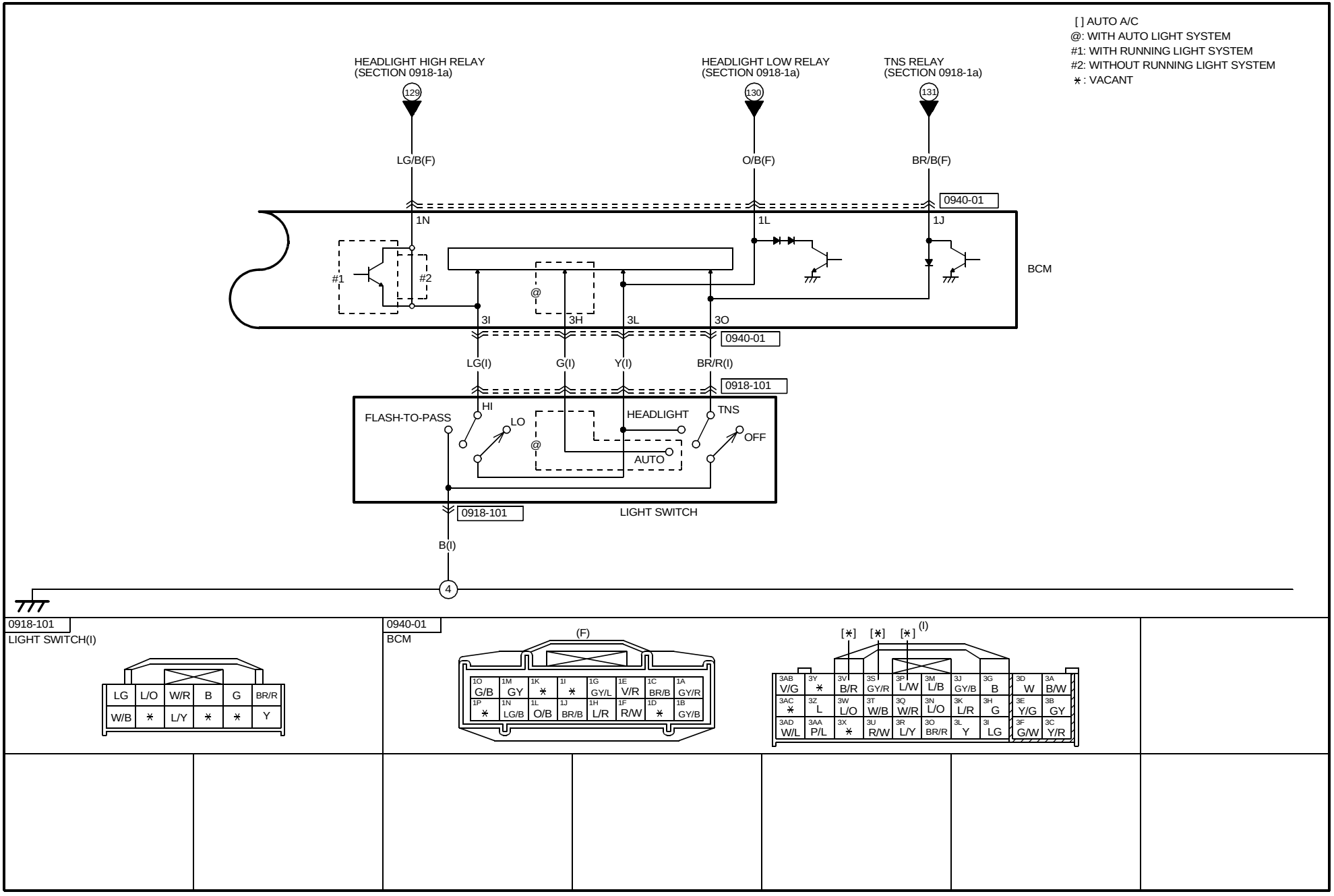

cardiagn.com

HARNESS SYMBOL : (F) (E) (R)

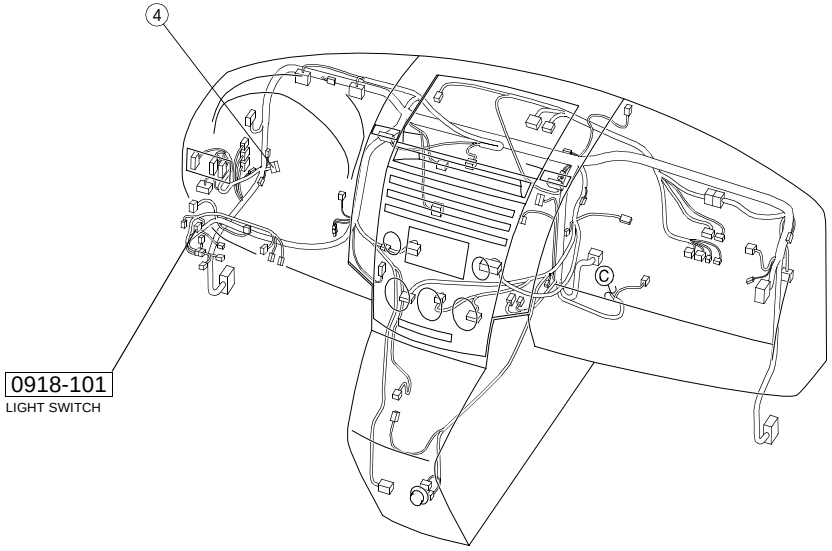

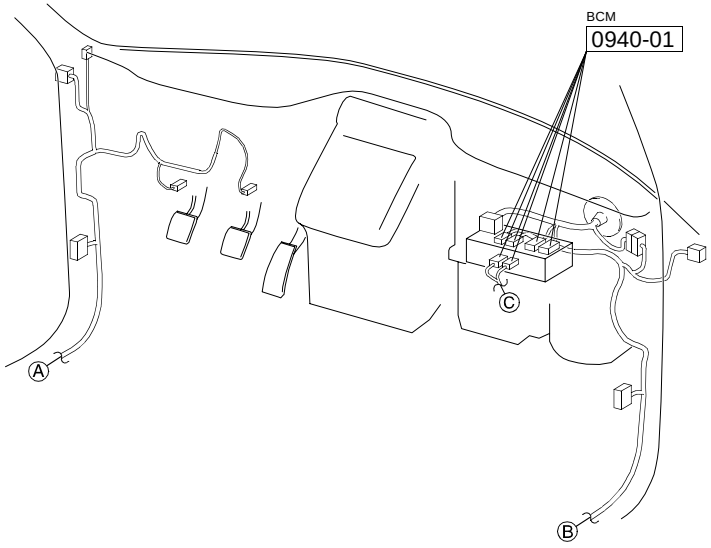

cardiagn.com

LICENSE PLATE LIGHT/PARKING LIGHT/TAILLIGHT

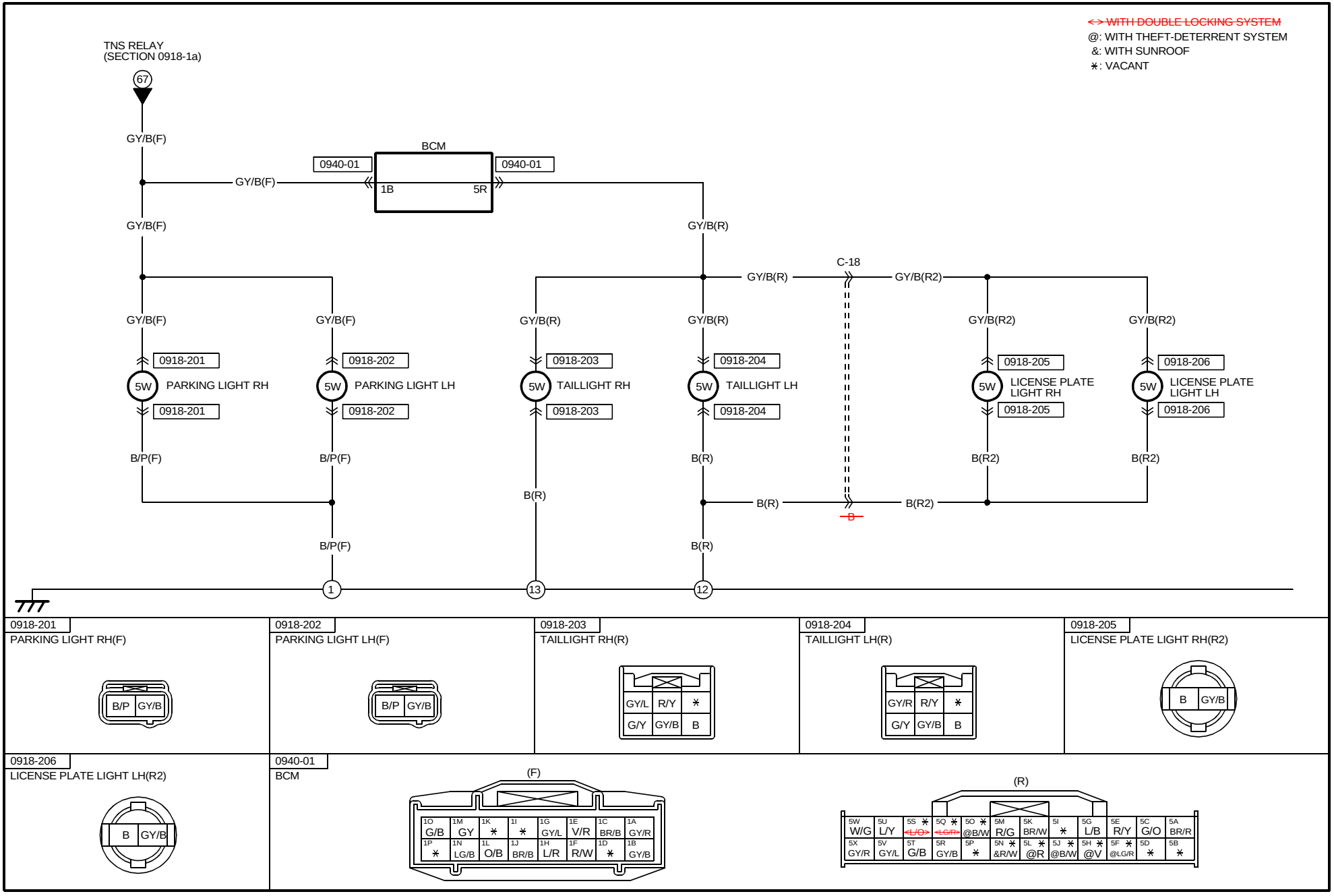

cardiagn.com

HARNESS SYMBOL : (F) (E) (R)

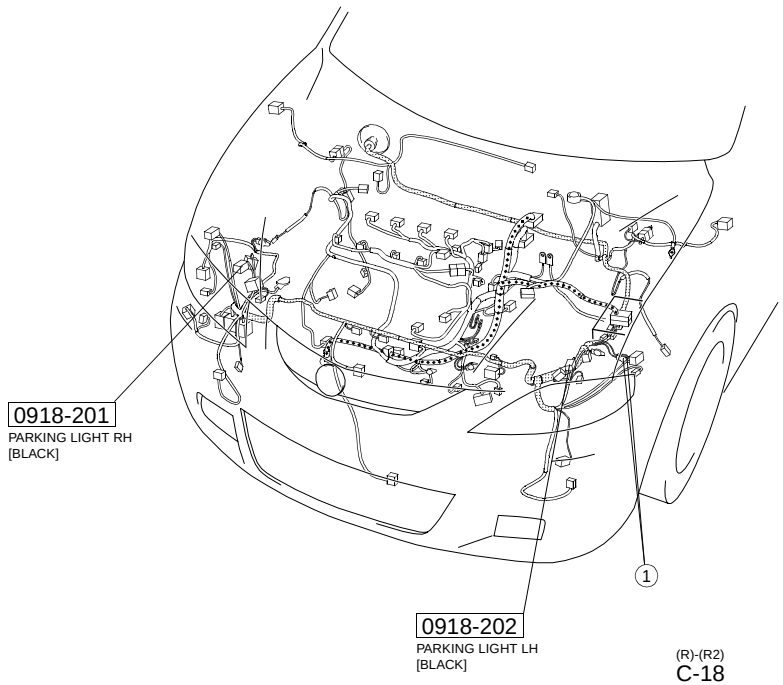

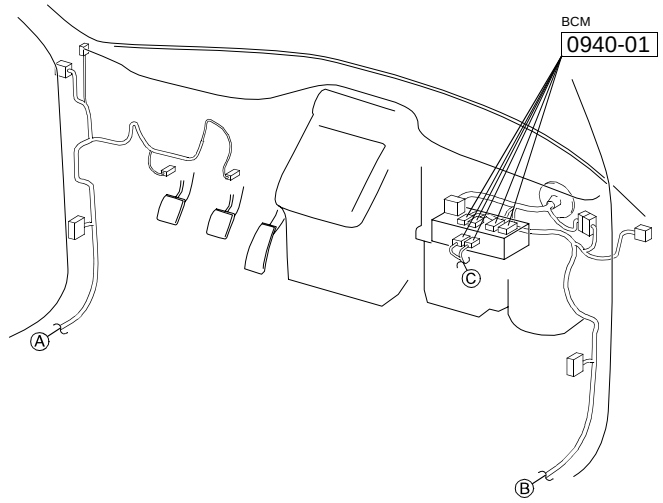

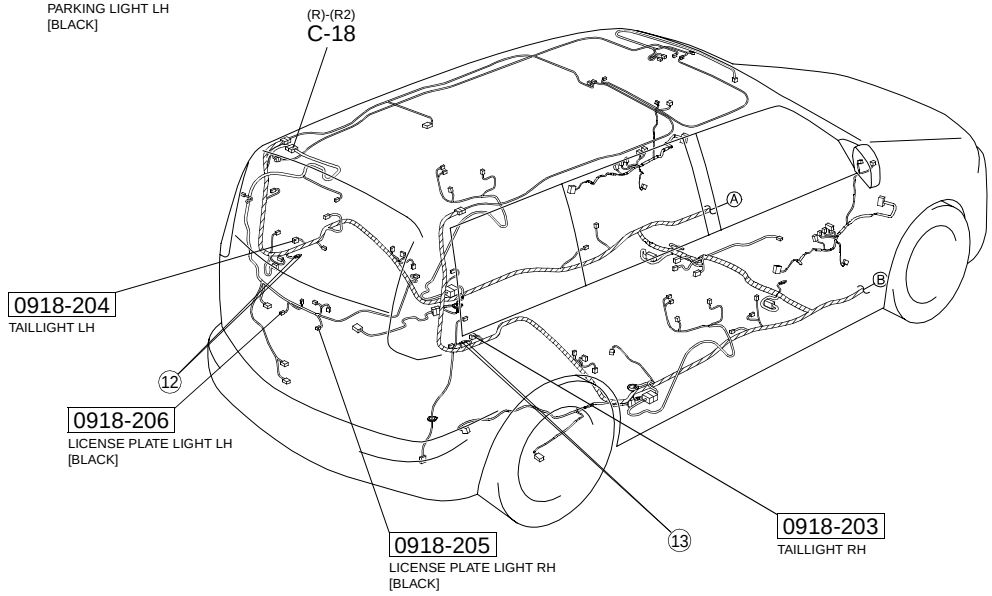

cardiagn.com

FRONT FOG LIGHT

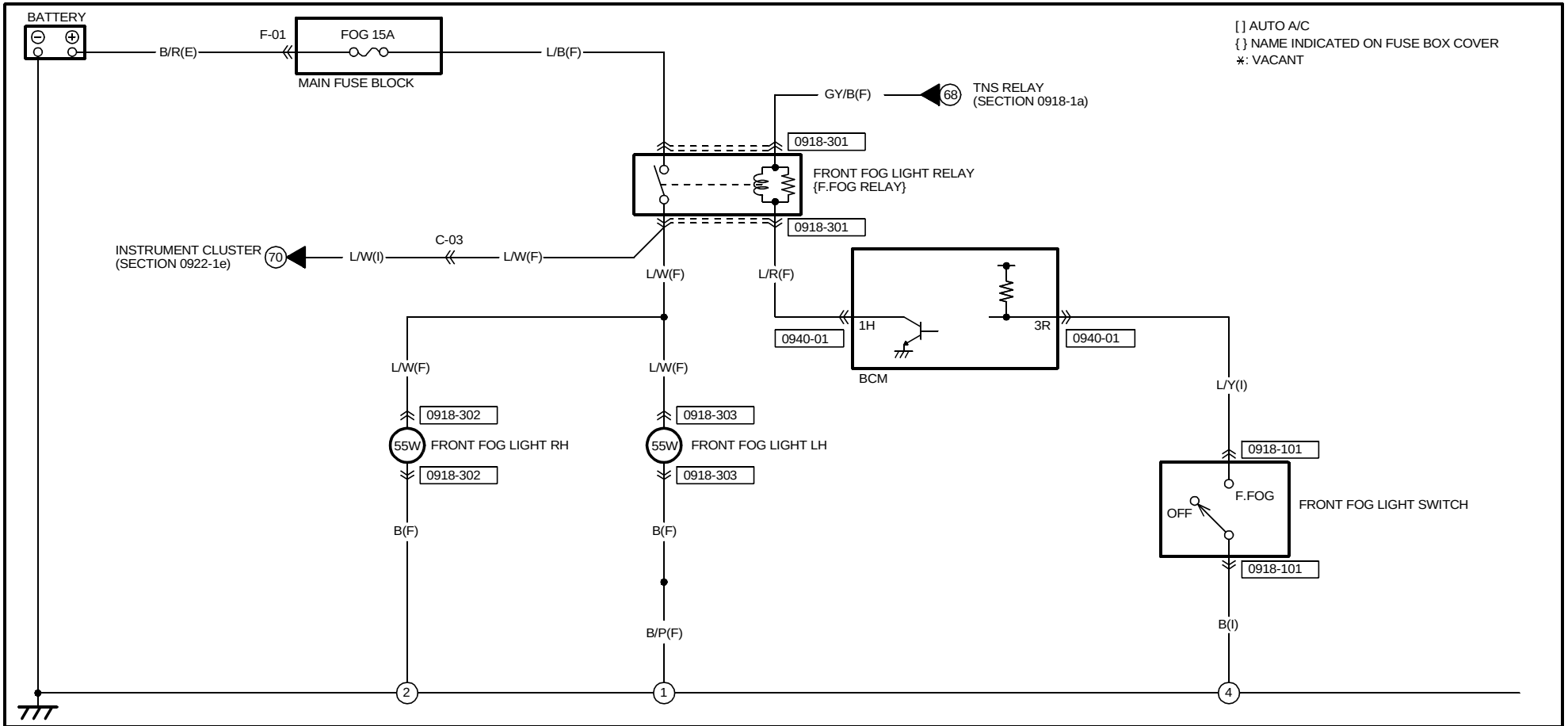

0918-301
FRONT FOG LIGHT RELAY(F)

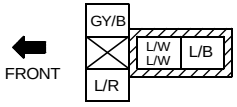

NOTE:SEEN FROM TERMINAL SIDE

0918-302
FRONT FOG LIGHT RH(F)

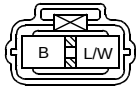

0918-303
FRONT FOG LIGHT LH(F)

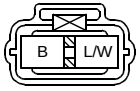

0918-101
FRONT FOG LIGHT SWITCH(I)

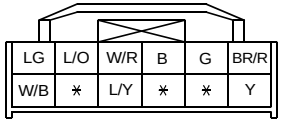

0940-01
BCM

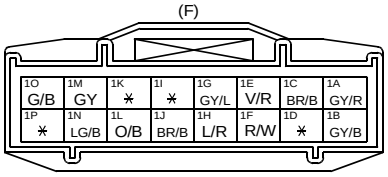

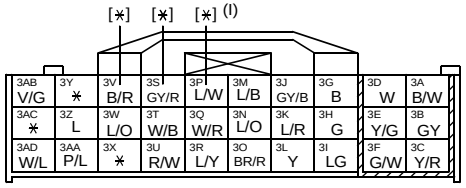

cardiagn.com

HARNESS SYMBOL : (F) (E) (R)

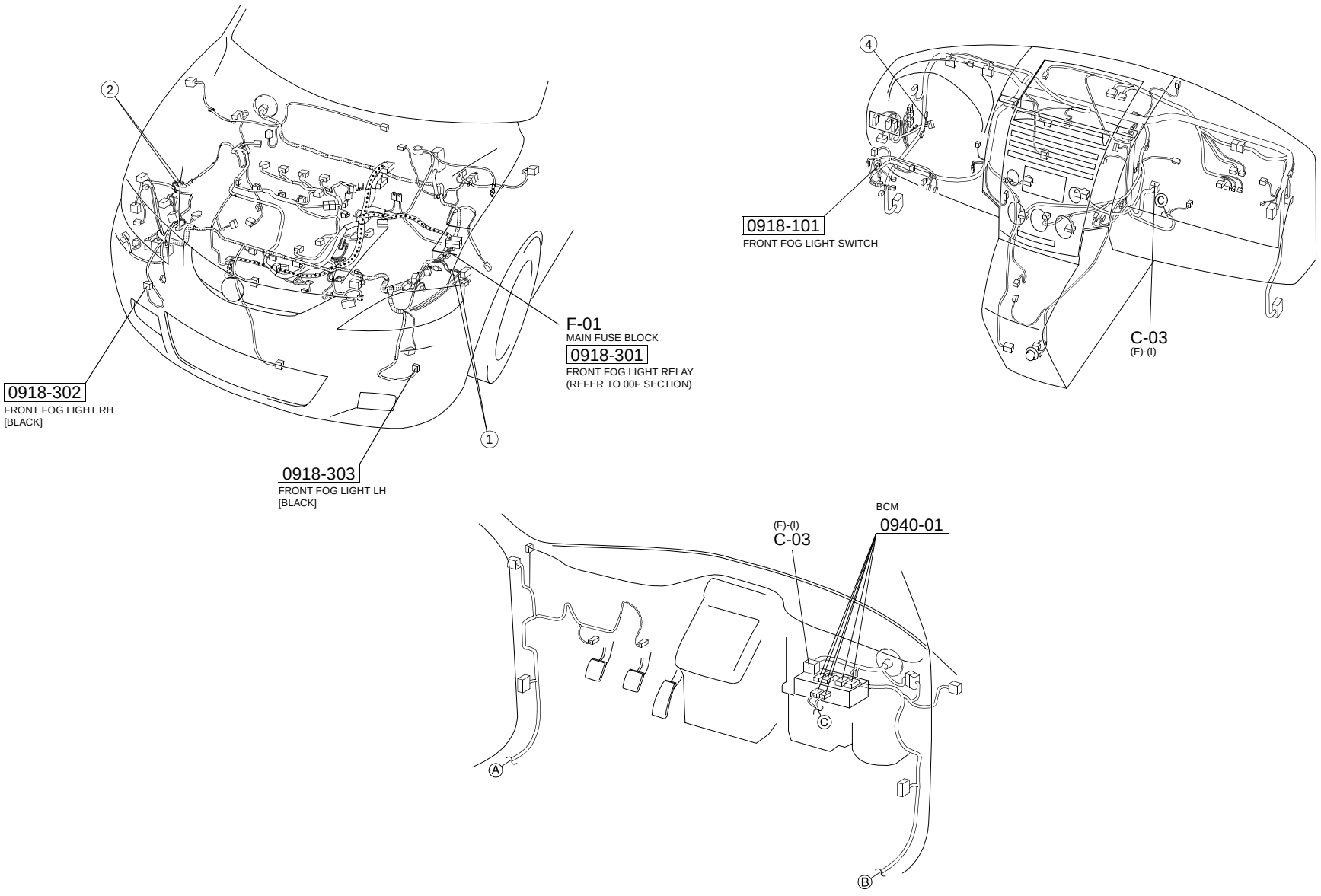

cardiagn.com

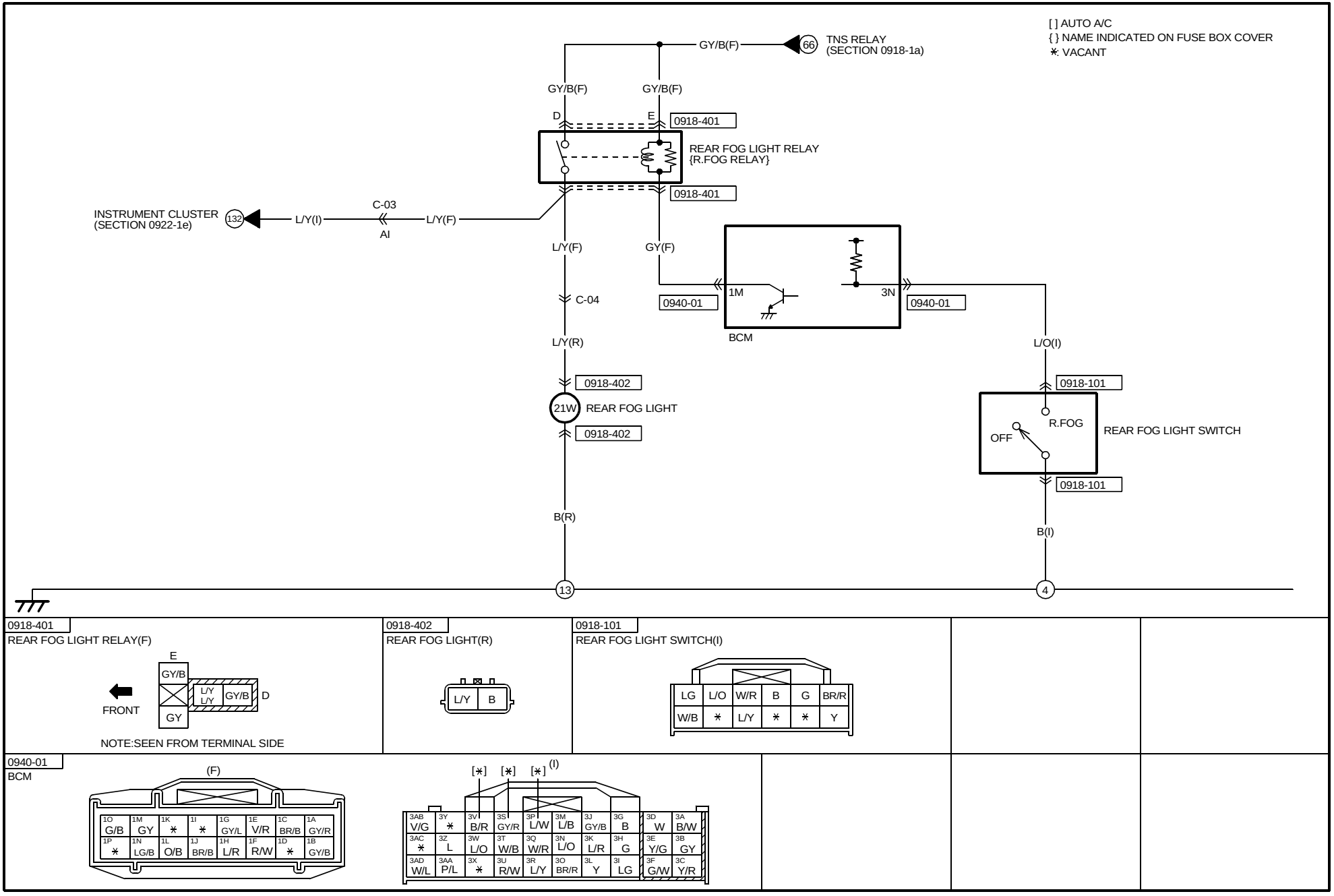

0918-401
REAR FOG LIGHT RELAY(F)

NOTE:SEEN FROM TERMINAL SIDE

0918-402
REAR FOG LIGHT(R)

0918-101
REAR FOG LIGHT SWITCH(I)

0940-01
BCM

cardiagn.com

HARNESS SYMBOL : (F) (E) (R)

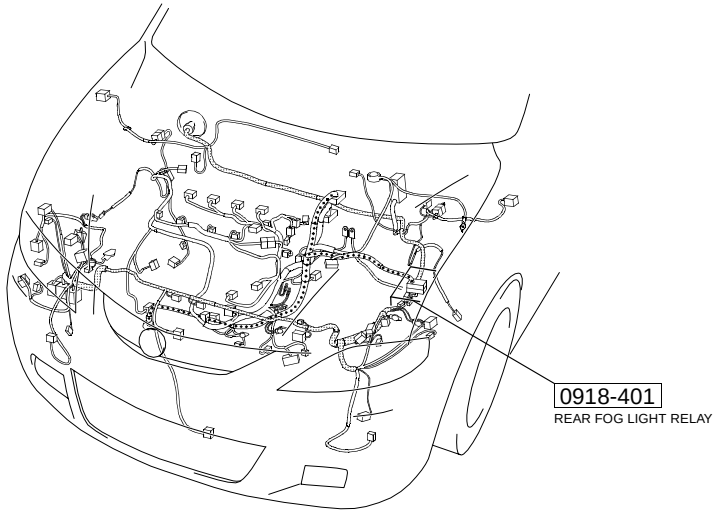

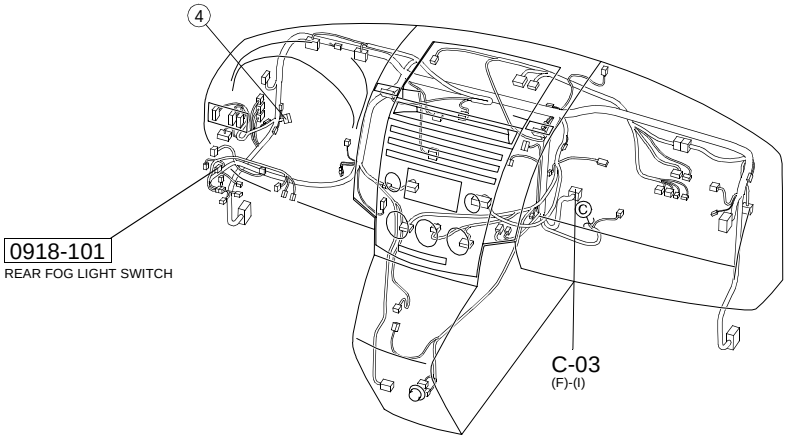

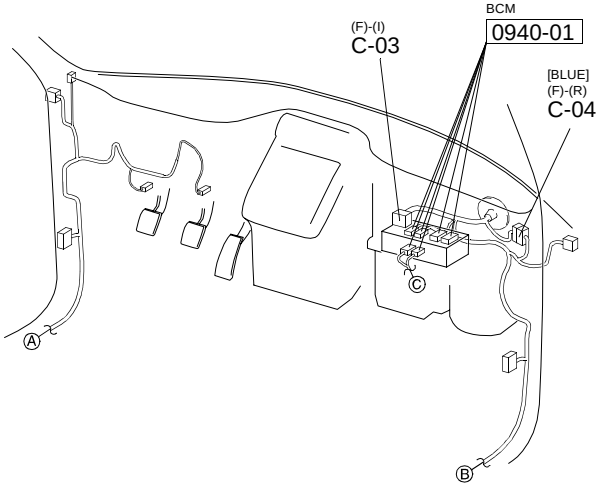

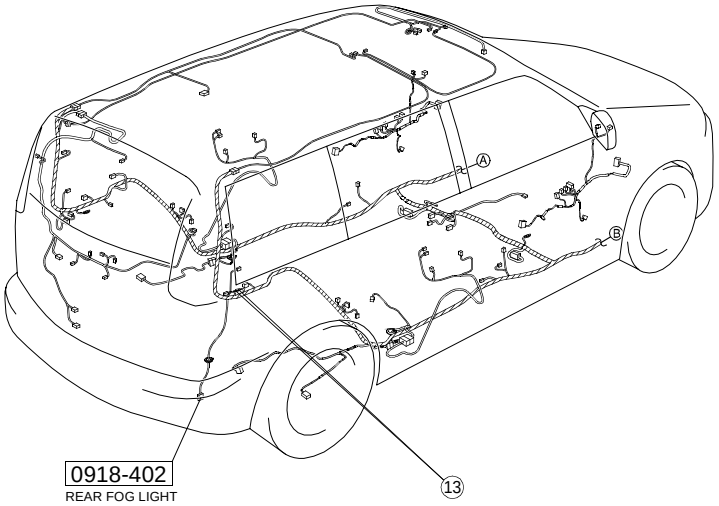

cardiagn.com

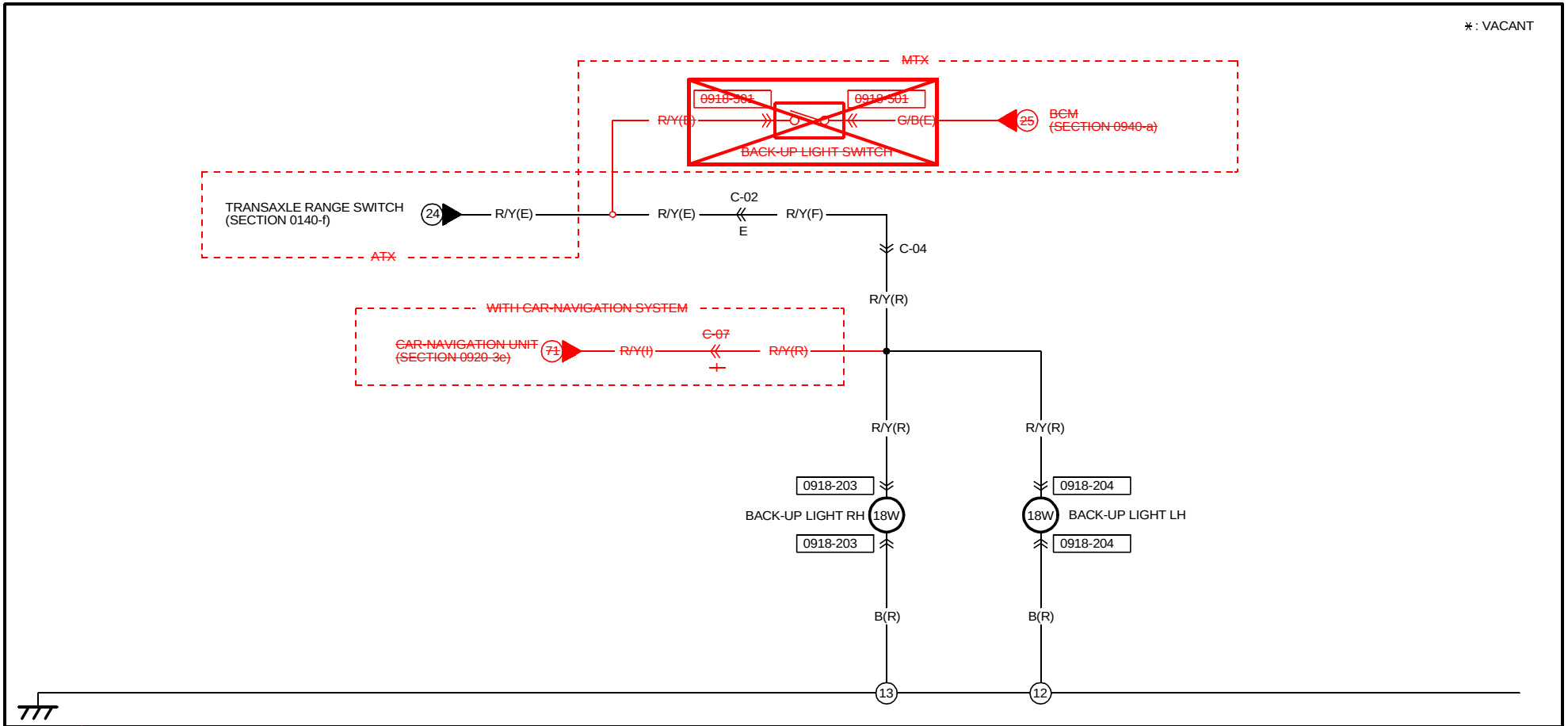

0918-501 BACK-UP LIGHT SWITCH(E)	0918-203 BACK-UP LIGHT RH(R)	0918-204 BACK-UP LIGHT LH(R)				
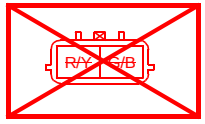 (MTX)	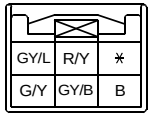	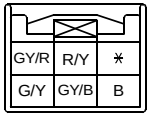				

cardiagn.com

HARNESS SYMBOL : (F) (E) (R)

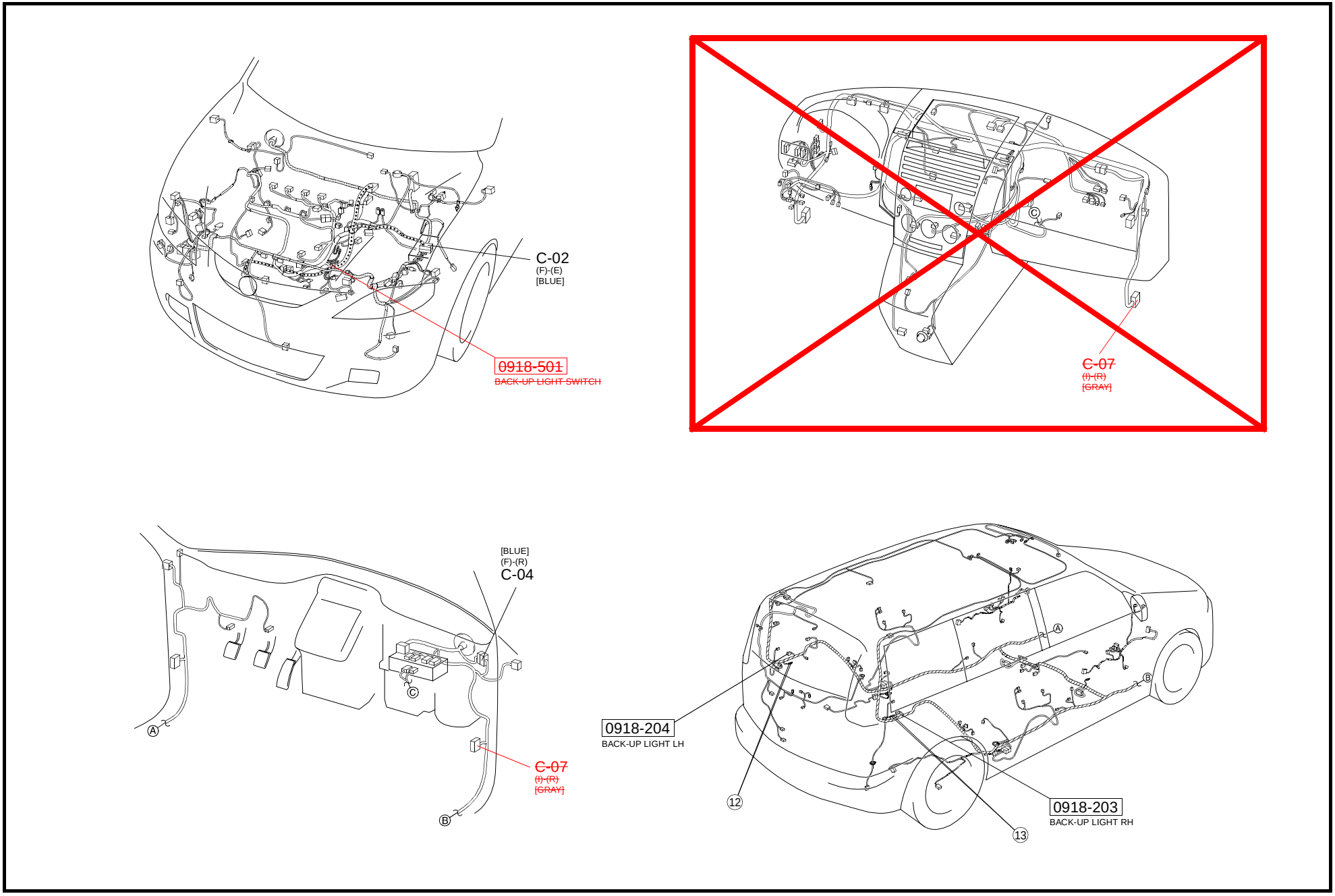

cardiagn.com

BRAKE LIGHT/HIGH-MOUNT BRAKE LIGHT

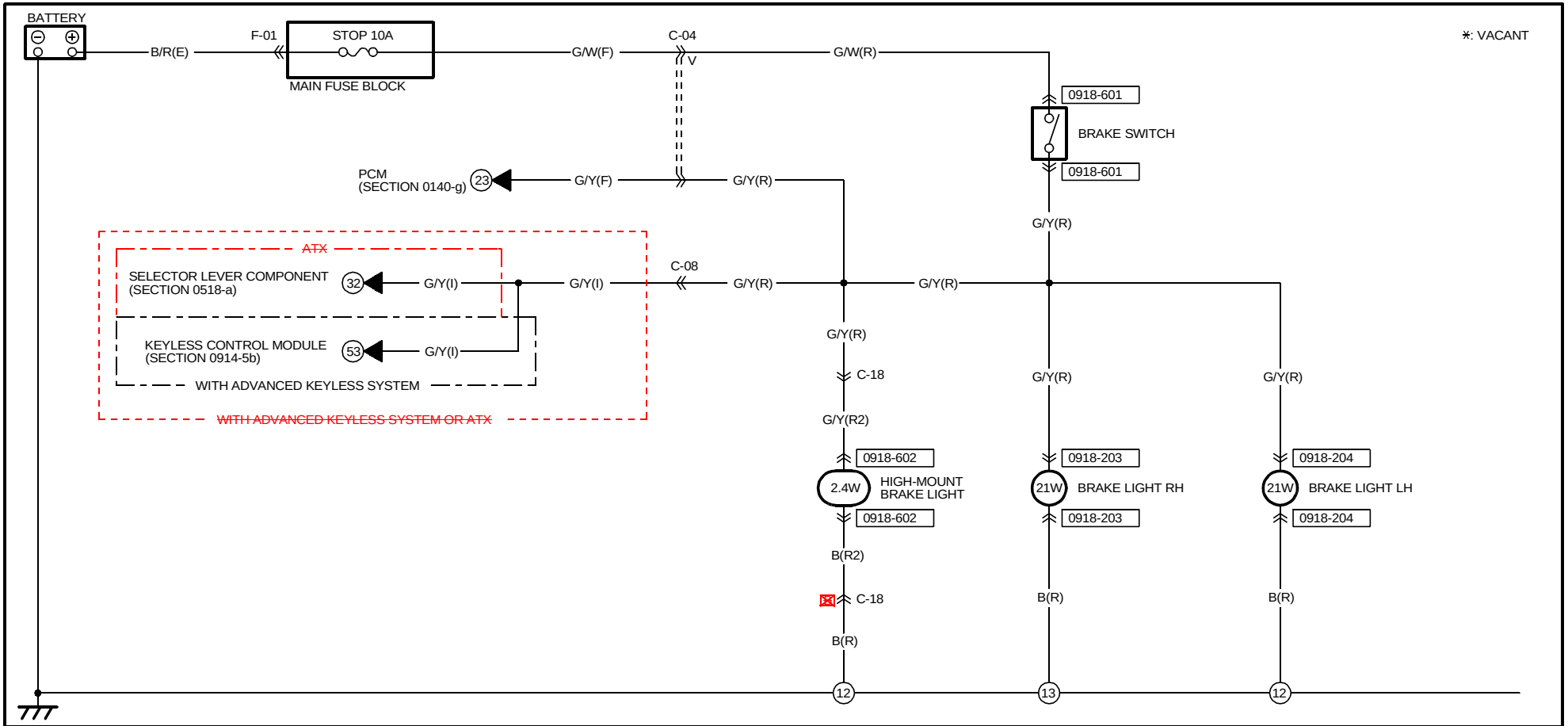

0918-601	0918-602	0918-203	0918-204		
BRAKE SWITCH(R)	HIGH-MOUNT BRAKE LIGHT(R2)	BRAKE LIGHT RH(R)	BRAKE LIGHT LH(R)		
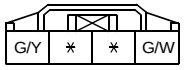		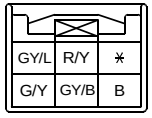	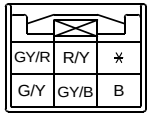		

cardiagn.com

HARNESS SYMBOL : (F) (E) (R)

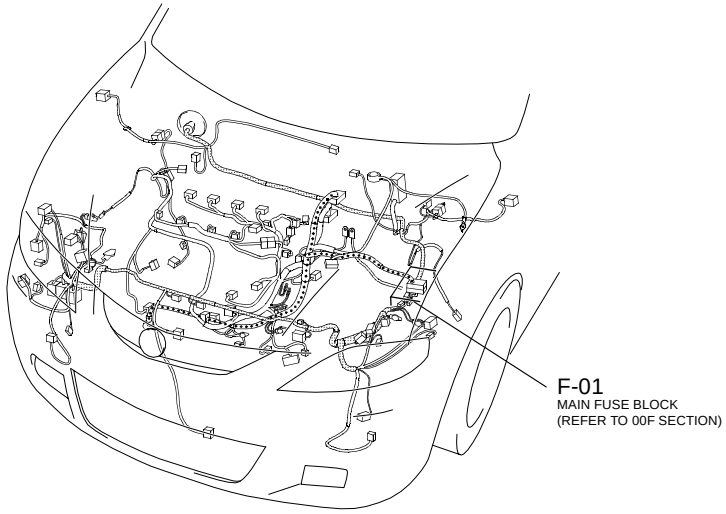

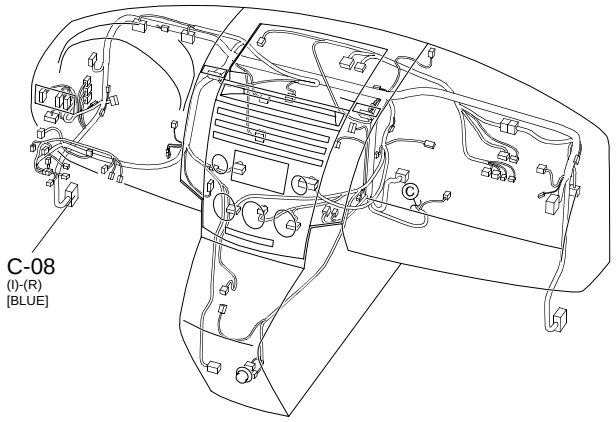

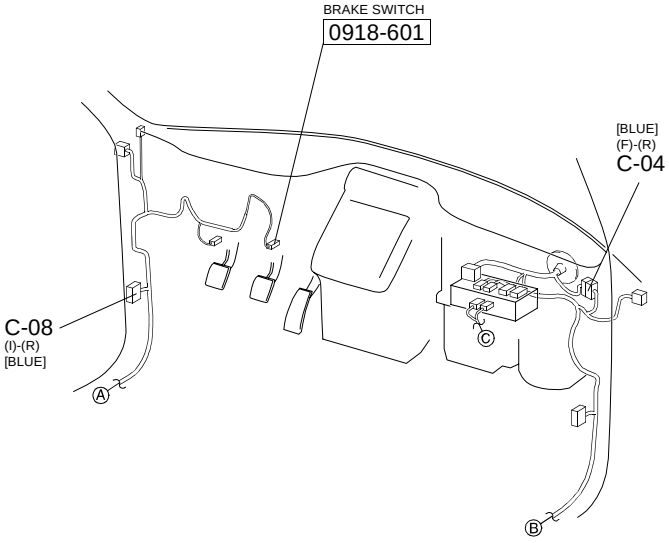

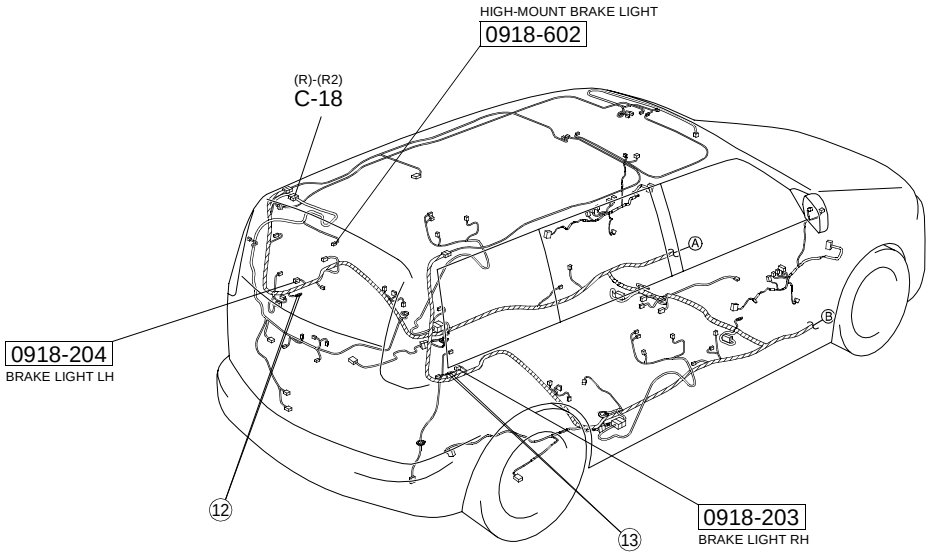

cardiagn.com

TURN AND HAZARD WARNING LIGHT

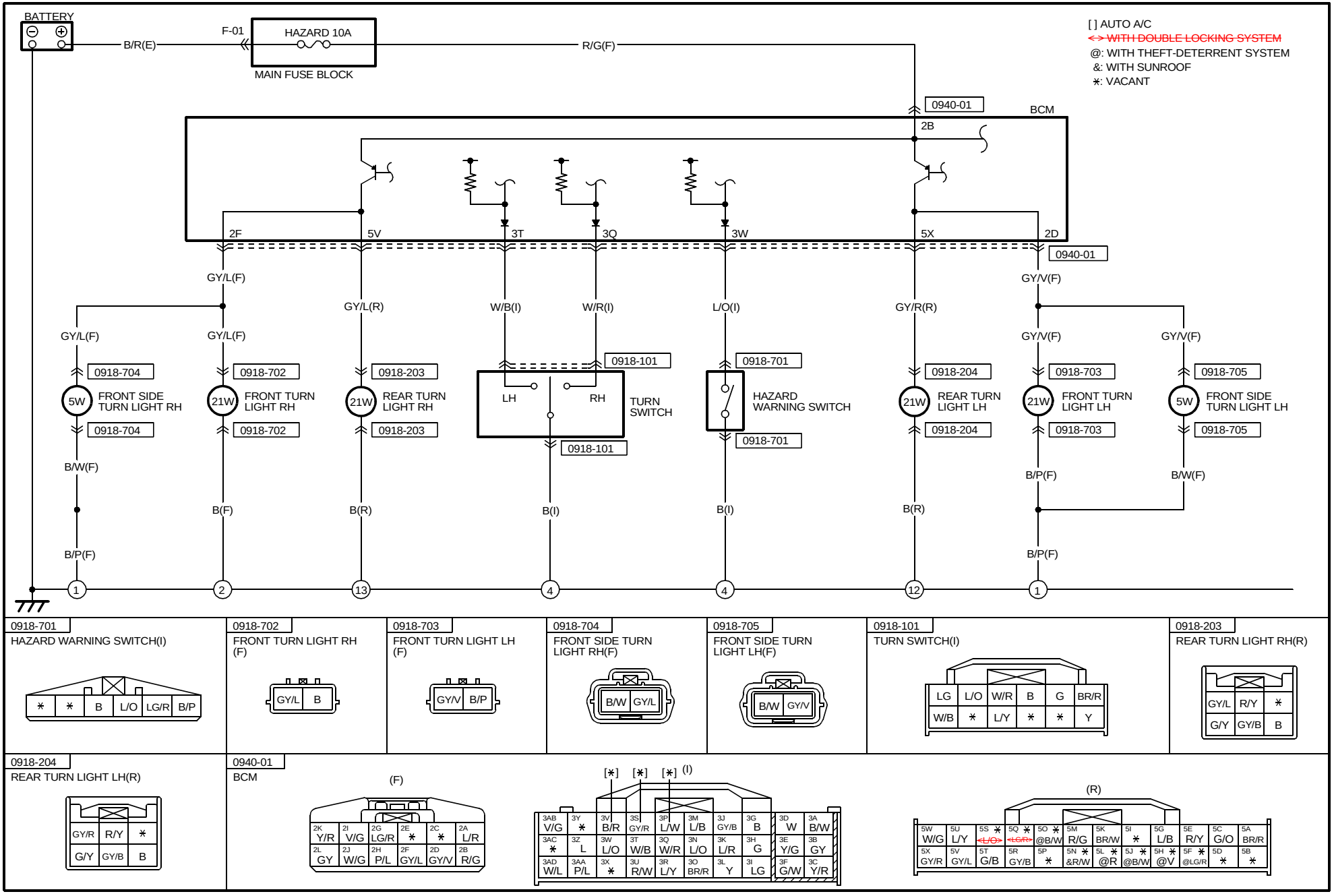

0918-701 HAZARD WARNING SWITCH(I)

*	*	B	L/O	LG/R	B/P

0918-702 FRONT TURN LIGHT RH (F)

GY/L	B

0918-703 FRONT TURN LIGHT LH (F)

GY/V	B/P

0918-704 FRONT SIDE TURN LIGHT RH(F)

B/W	GY/L

0918-705 FRONT SIDE TURN LIGHT LH(F)

B/W	GY/V

0918-101 TURN SWITCH(I)

LG	L/O	W/R	B	G	BR/R
W/B	*	L/Y	*	*	Y

0918-203 REAR TURN LIGHT RH(R)

GY/L	R/Y	*
G/Y	GY/B	B

0918-204 REAR TURN LIGHT LH(R)

GY/R	R/Y	*
G/Y	GY/B	B

0940-01 BCM

(F)

2K Y/R	2I V/G	2G LG/R	2E *	2C *	2A L/R
2L GY	2J W/G	2H P/L	2F GY/L	2D GY/V	2B R/G

[*] [*] [*] (I)

3AB V/G	3Y *	3V B/R	3S GY/R	3P L/W	3M L/B	3J GY/B	3G B	3D W	3A B/W
3AC *	3Z L	3W L/O	3T W/B	3Q W/R	3N L/O	3K L/R	3H G	3E Y/G	3B GY
3AD W/L	3AA P/L	3X *	3U R/W	3R L/Y	3O BR/R	3L Y	3I LG	3F G/W	3C Y/R

(R)

5W W/G	5U L/Y	5S * <L/O>	5Q * <LG/R>	5O * @B/W	5M R/G	5K BR/W	5I *	5G L/B	5E R/Y	5C G/O	5A BR/R
5X GY/R	5V GY/L	5T G/B	5R GY/B	5P *	5N * &R/W	5L * @R	5J * @B/W	5H * @V	5F * @LG/R	5D *	5B *

cardiagn.com

HARNESS SYMBOL : (F) (E) (R)

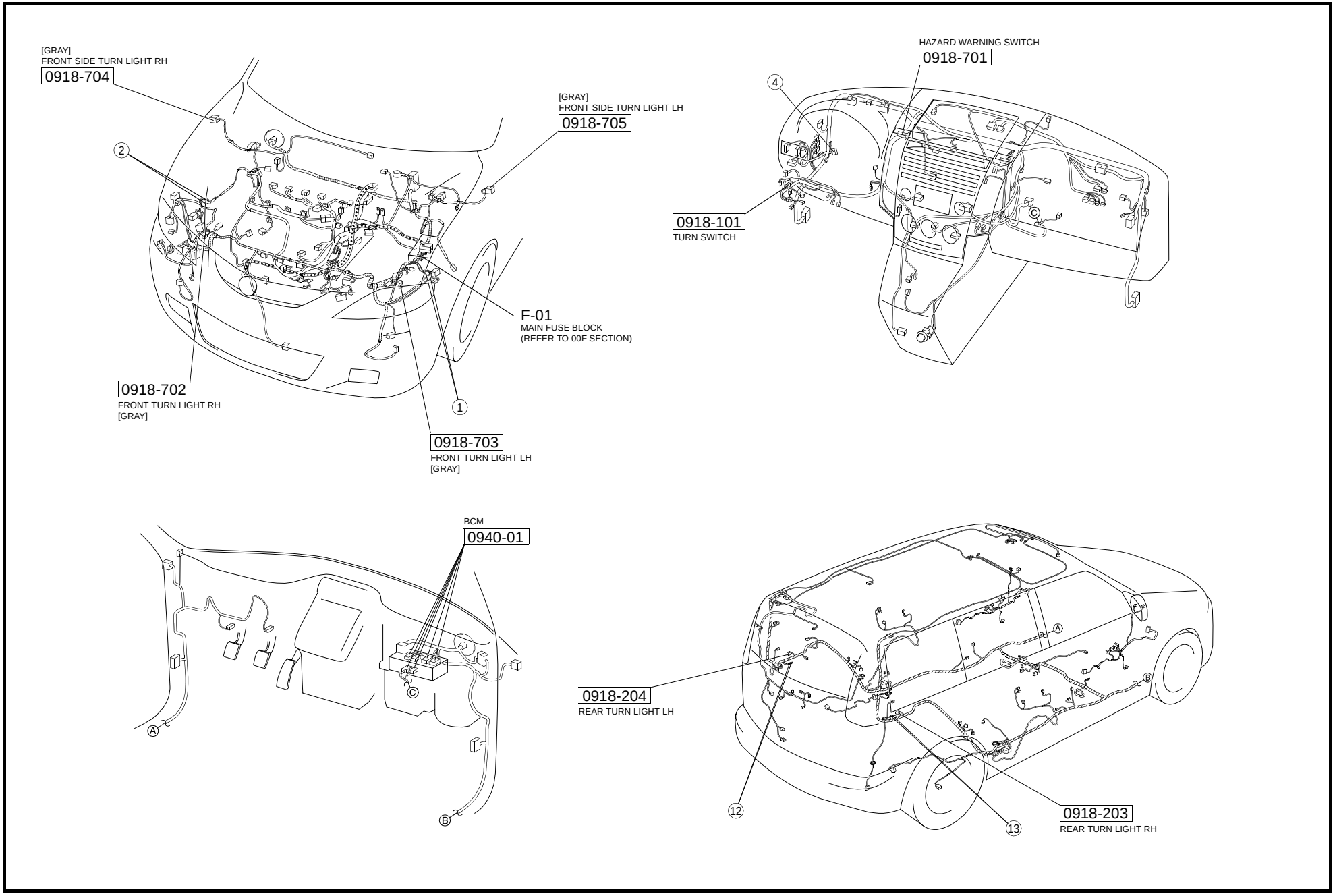

cardiagn.com

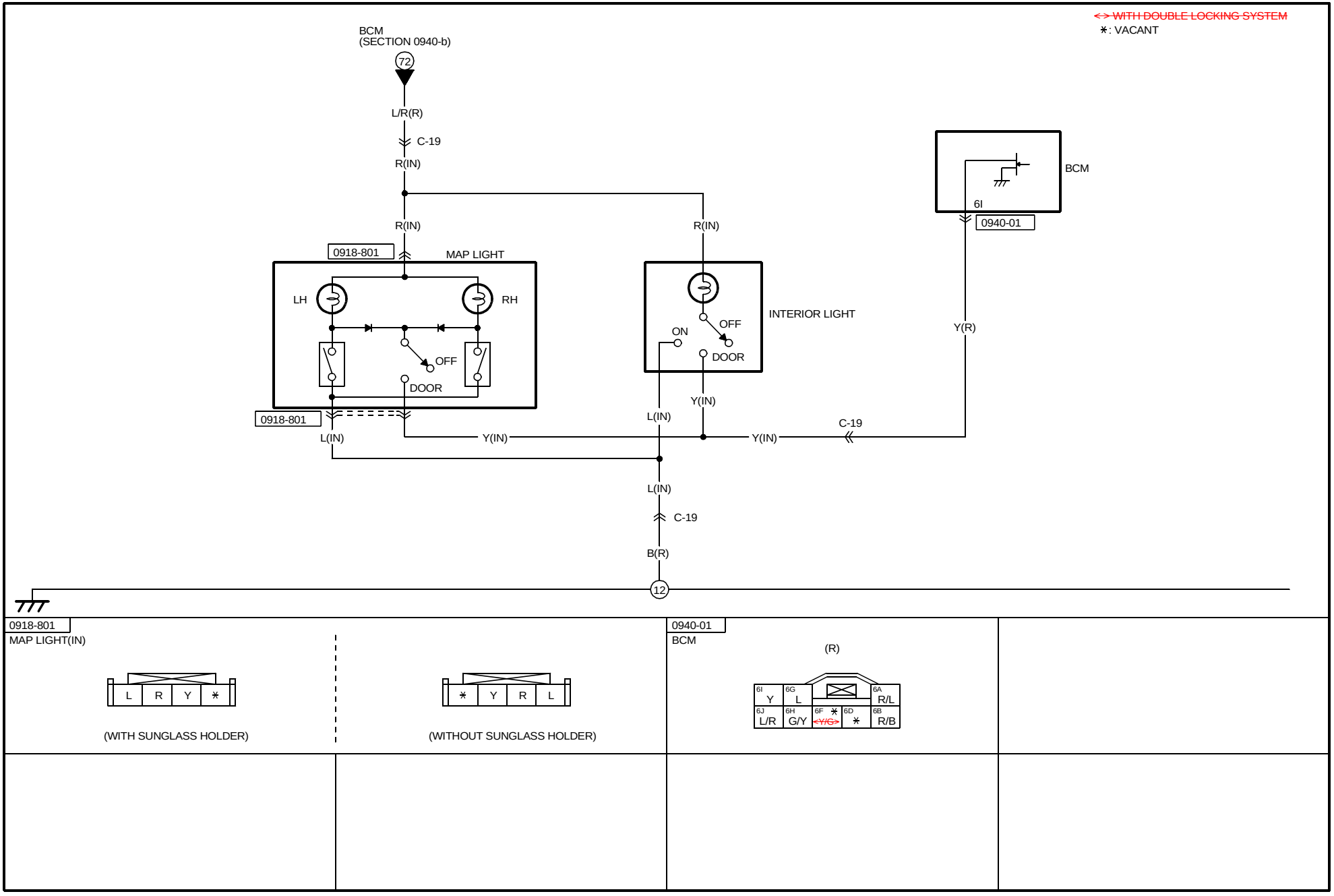

cardiagn.com

HARNESS SYMBOL : (F) (E) (R)

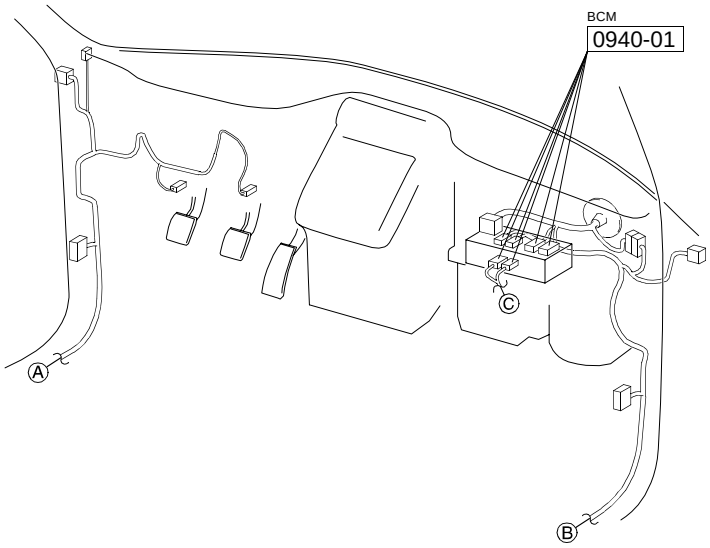

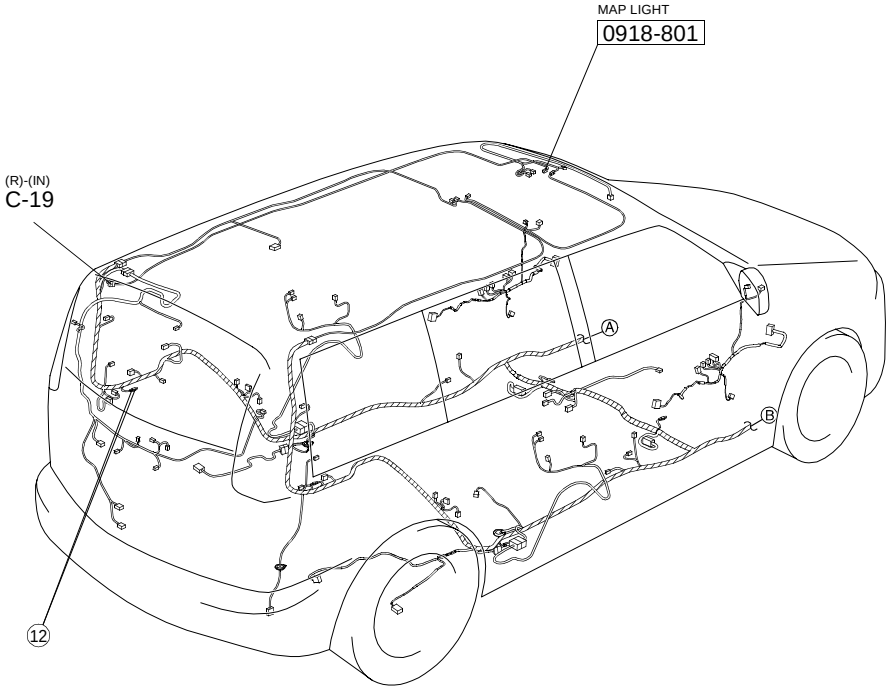

cardiagn.com

CARGO COMPARTMENT LIGHT

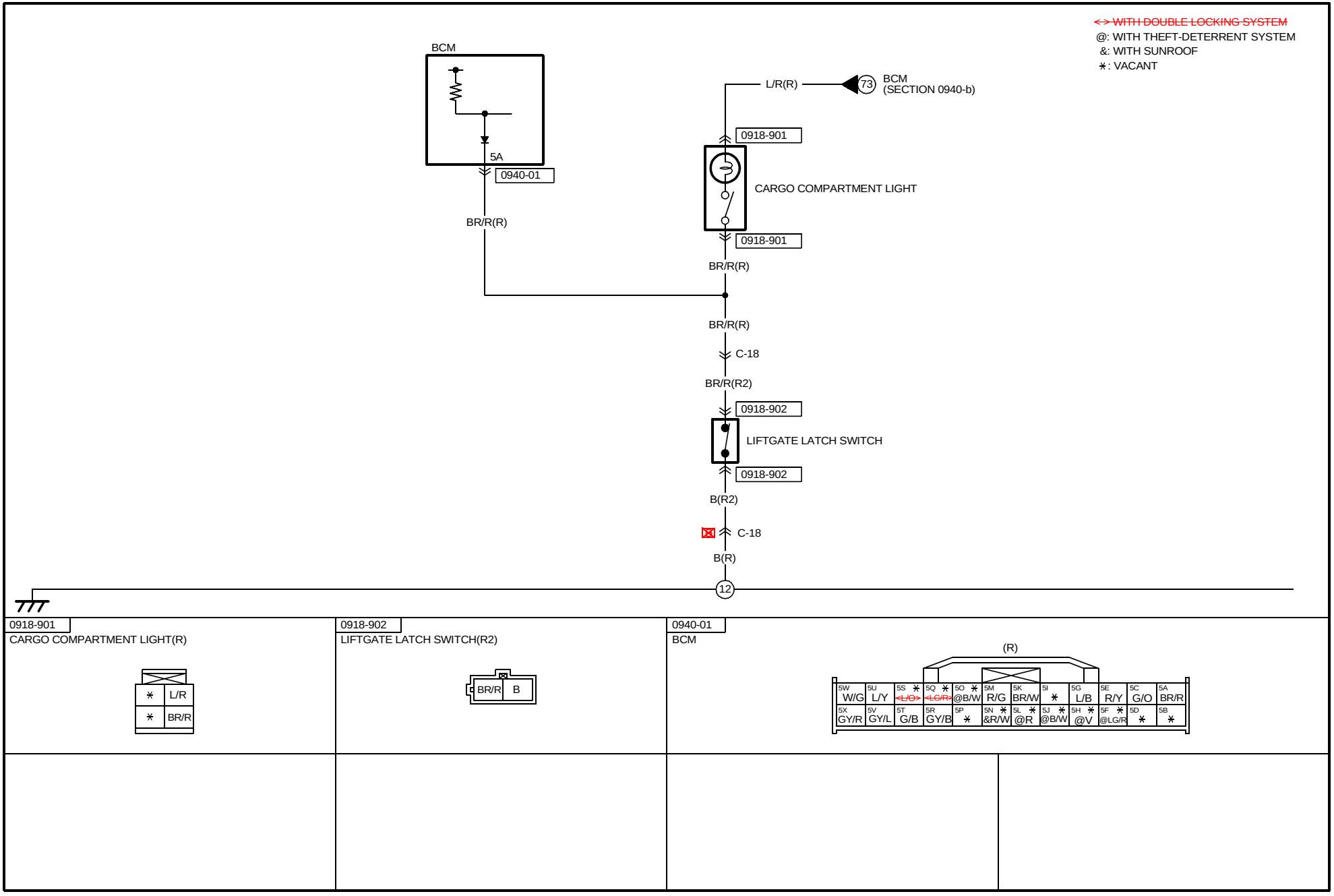

cardiagn.com

HARNESS SYMBOL : (F) (E) (R)

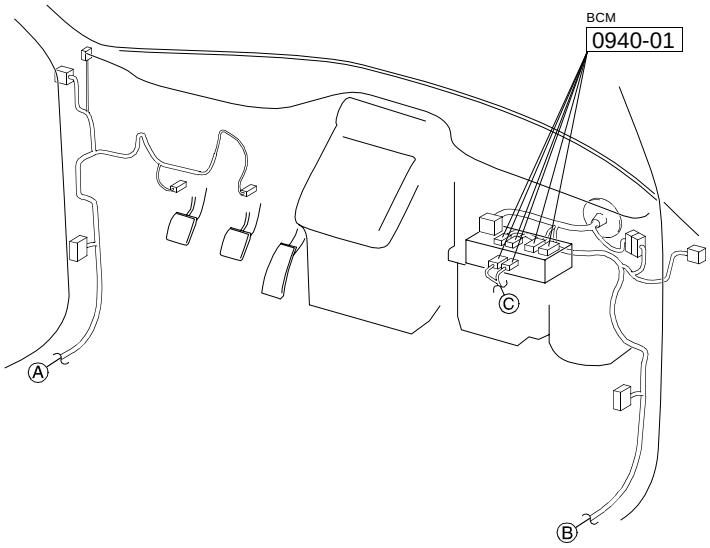

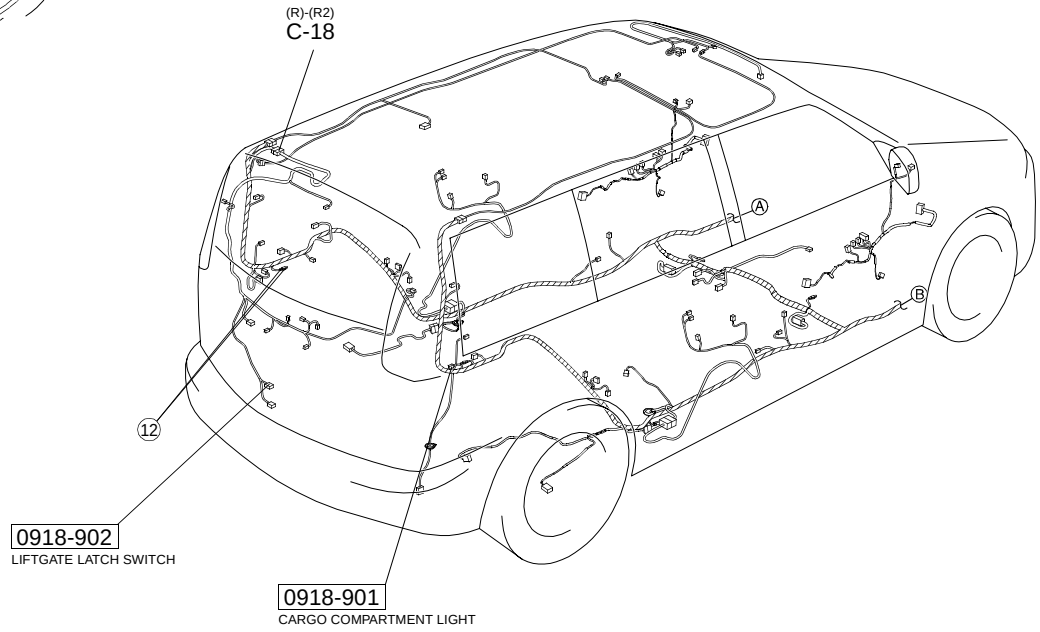

cardiagn.com

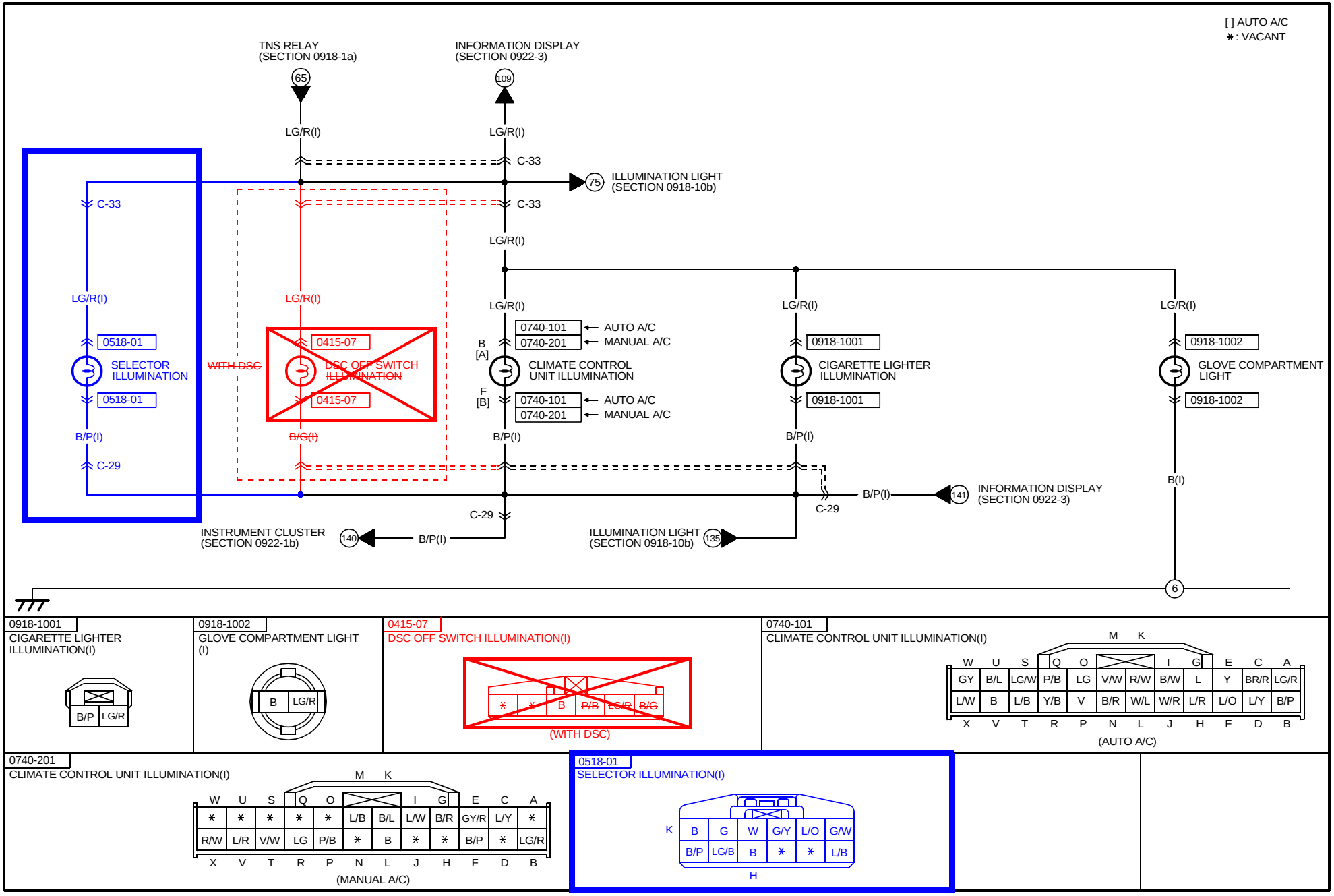

cardiagn.com

HARNESS SYMBOL : (F) (E) (R)

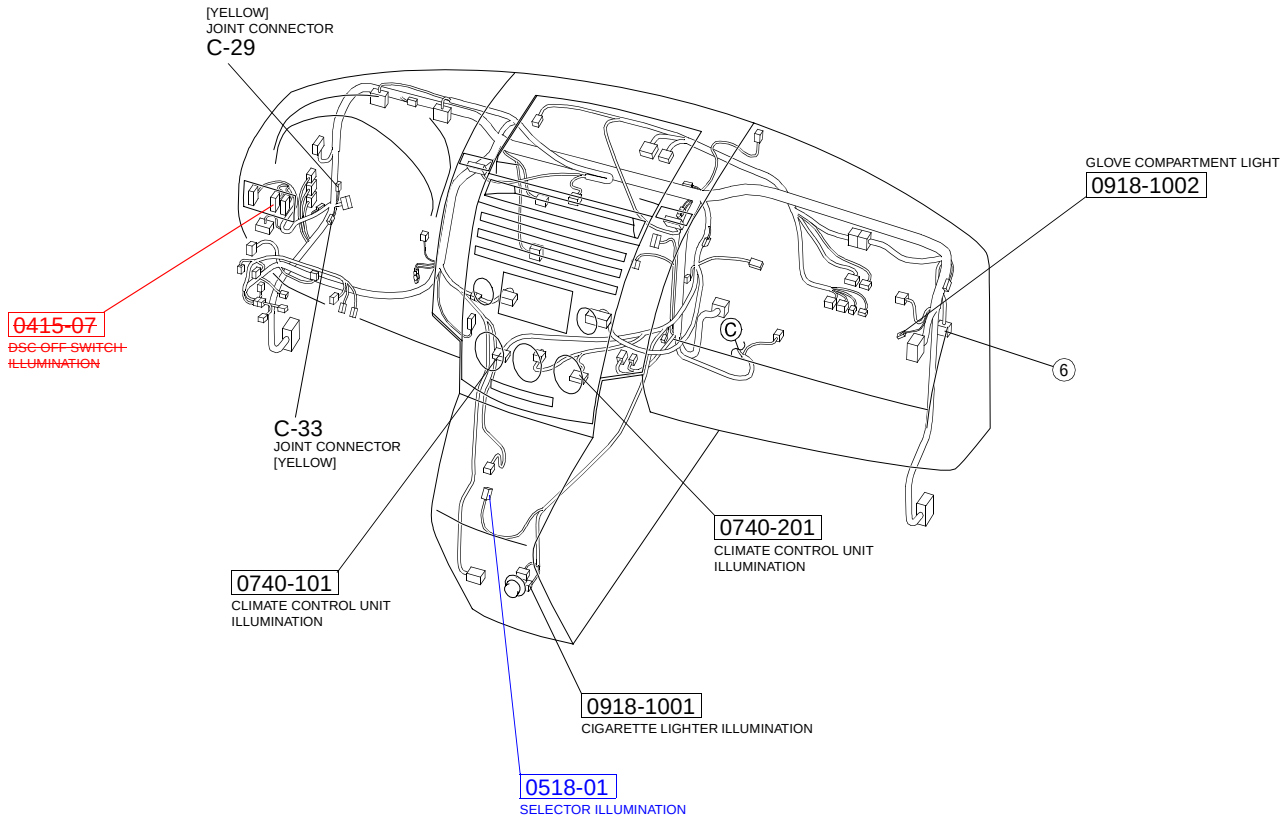

cardiagn.com

[ ] NOT USED
*: VACANT

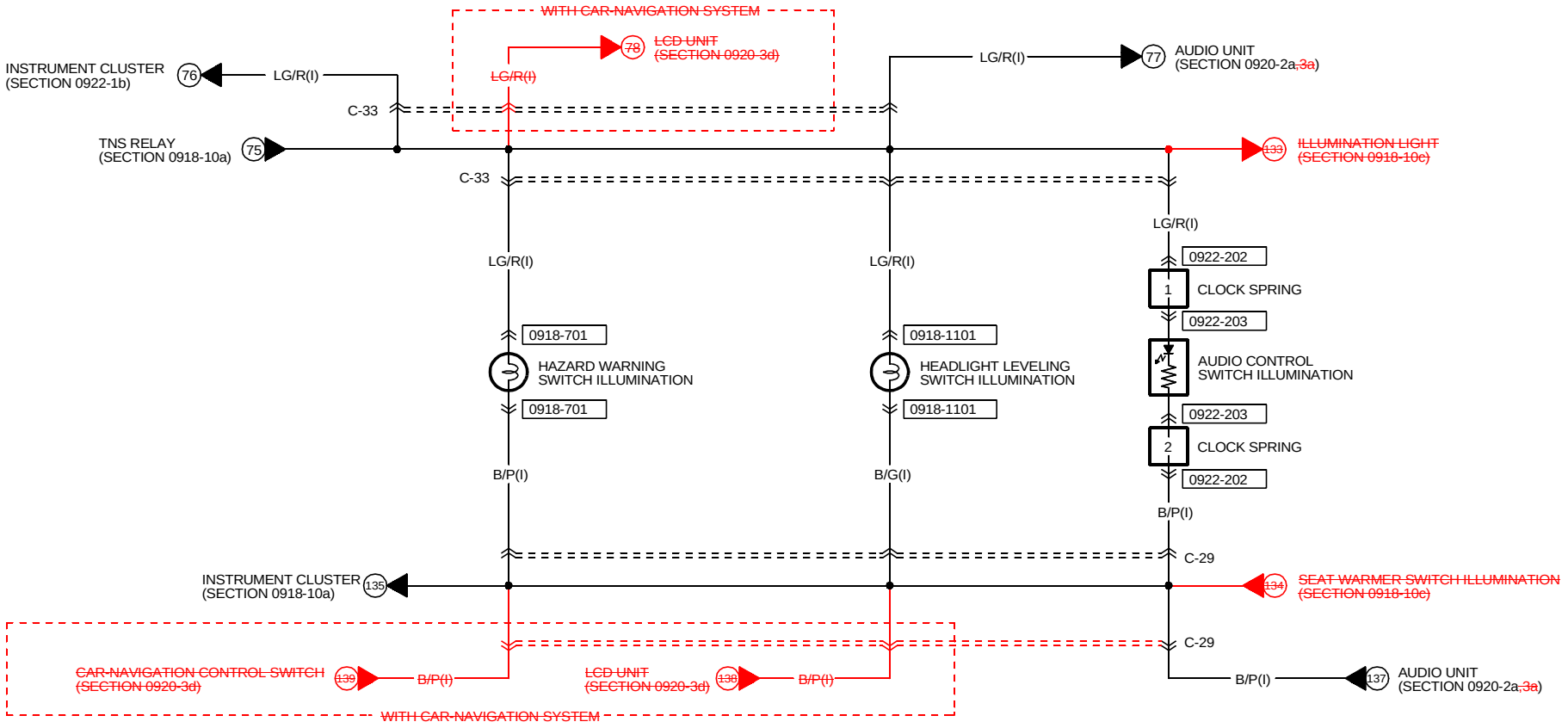

0918-701
HAZARD WARNING SWITCH ILLUMINATION(I)

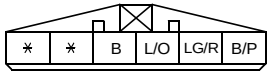

0918-1101
HEADLIGHT LEVELING SWITCH ILLUMINATION(I)

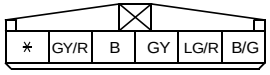

0922-202
INSTRUMENT PANEL(I)-CLOCK SPRING (I)

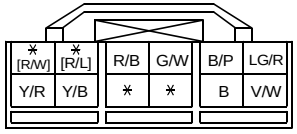

(CLOCK SPRING)

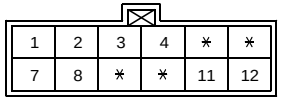

TERMINALS OF THIS CONNECTOR ARE INDICATED BY NUMBERS.

0922-203
AUDIO CONTROL SWITCH ILLUMINATION (CLOCK SPRING)

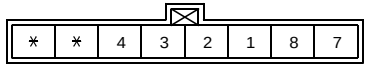

TERMINALS OF THIS CONNECTOR ARE INDICATED BY NUMBERS.

cardiagn.com

HARNESS SYMBOL : (F) (E) (R)

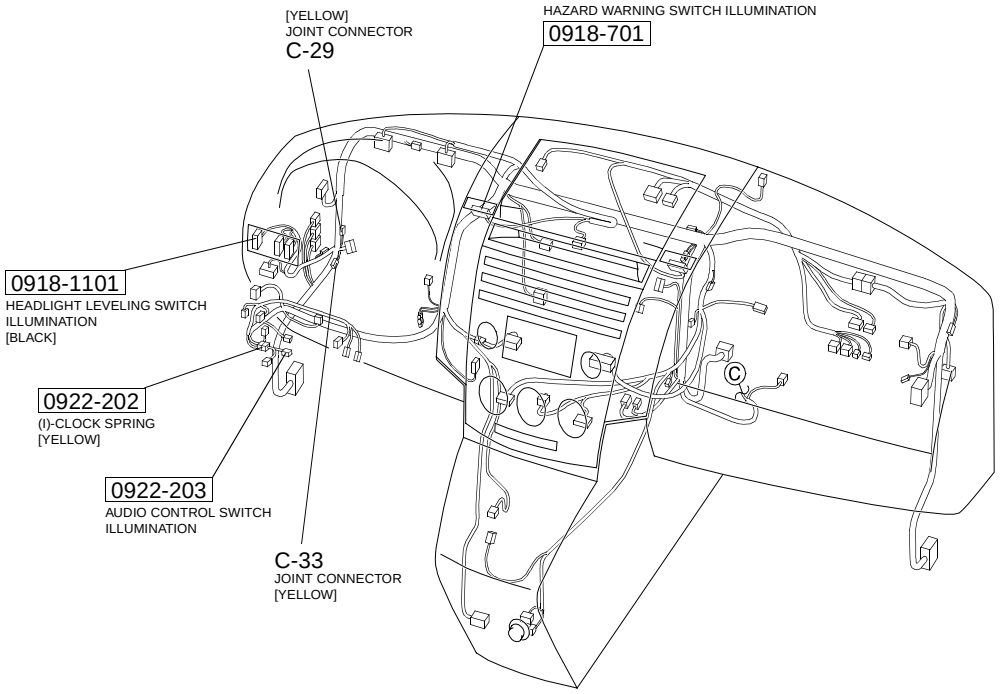

cardiagn.com

[ ] AUTO A/C
∗: VACANT

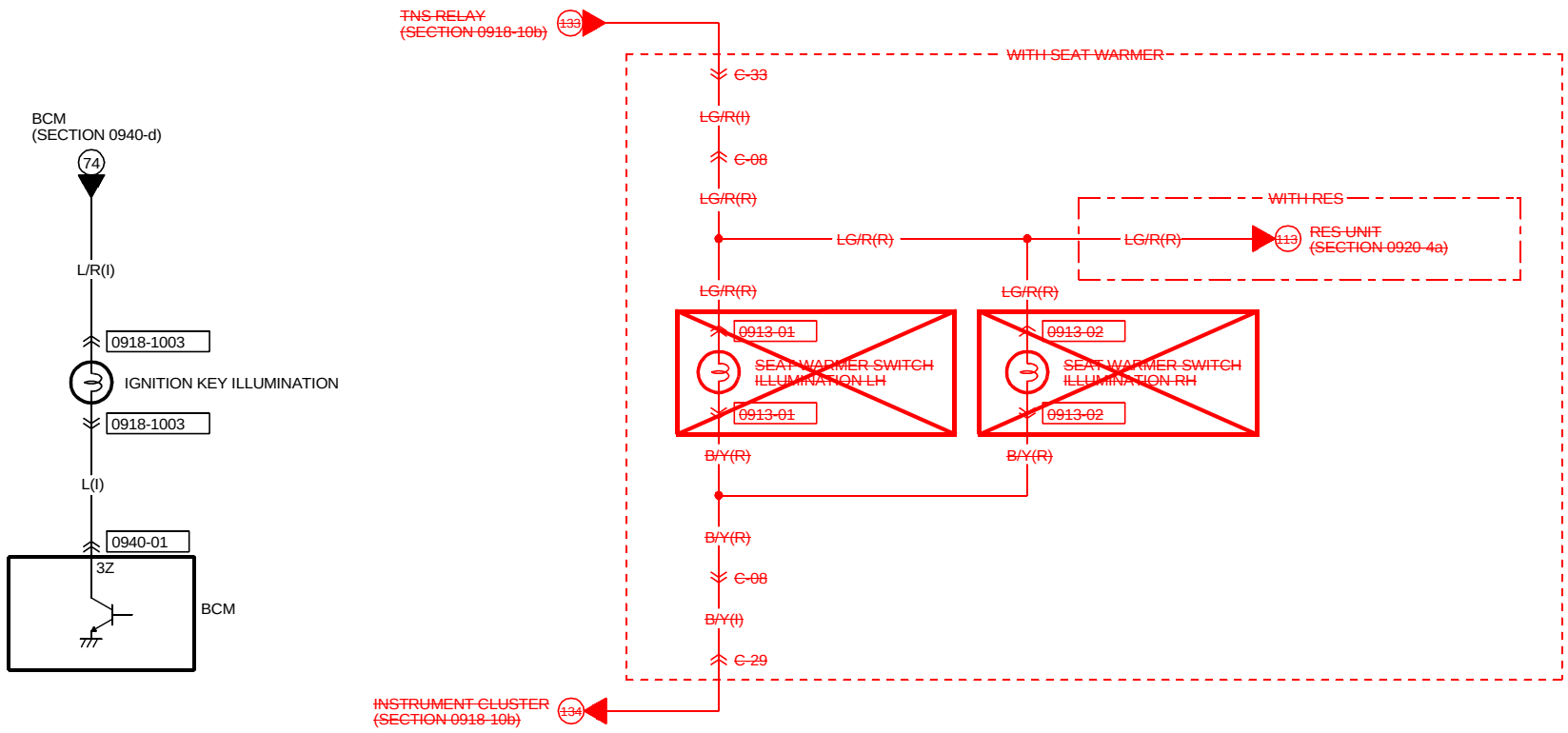

0918-1003	0913-01	0913-02	0940-01
IGNITION KEY ILLUMINATION(I)	SEAT WARMER SWITCH ILLUMINATION LH(R)	SEAT WARMER SWITCH ILLUMINATION RH(R)	BCM
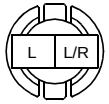	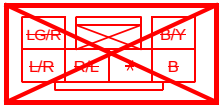	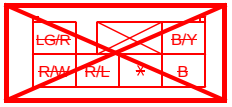	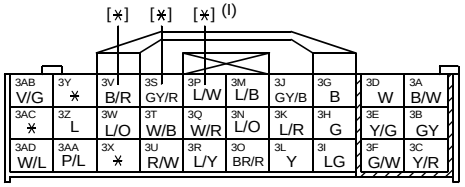
	(WITH SEAT WARMER)	(WITH SEAT WARMER)	

cardiagn.com

HARNESS SYMBOL : (F) (E) (R)

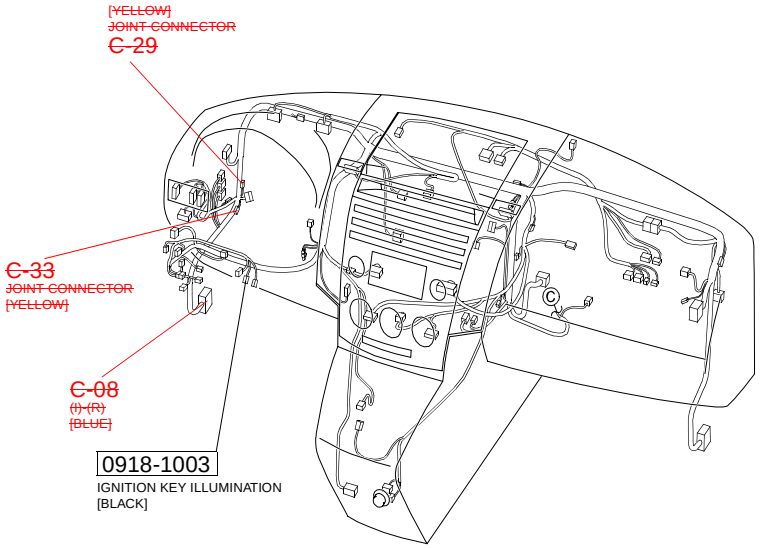

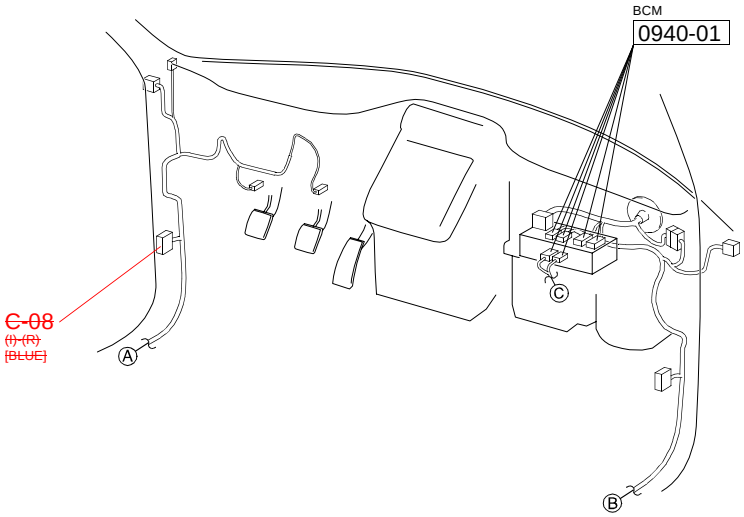

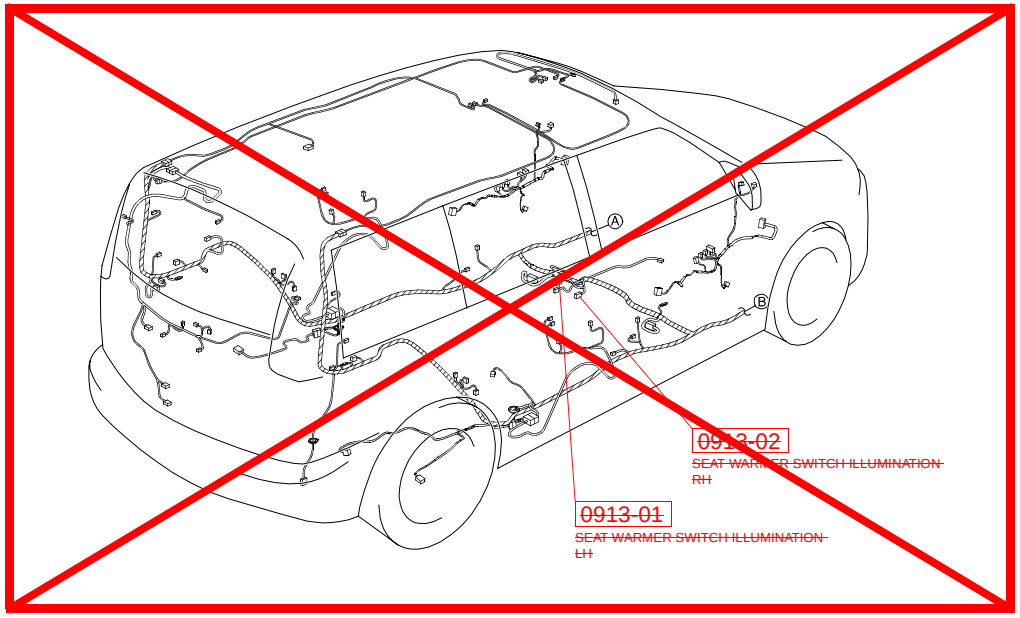

cardiagn.com

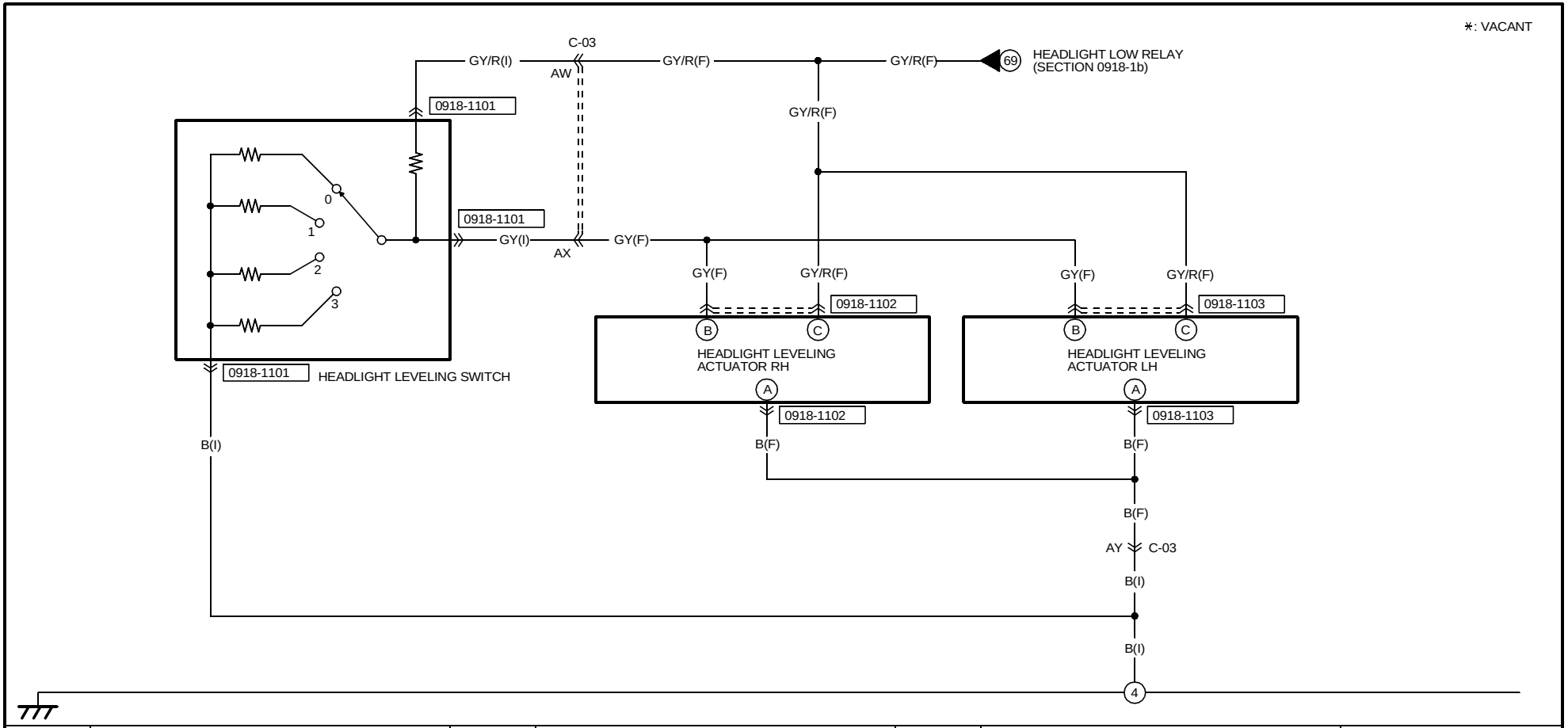

0918-1101	0918-1102	0918-1103
HEADLIGHT LEVELING SWITCH(I)	HEADLIGHT LEVELING ACTUATOR RH(F)	HEADLIGHT LEVELING ACTUATOR LH(F)

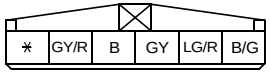

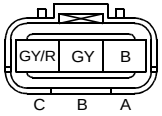

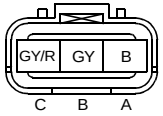

cardiagn.com

HARNESS SYMBOL : (F) (E) (R)

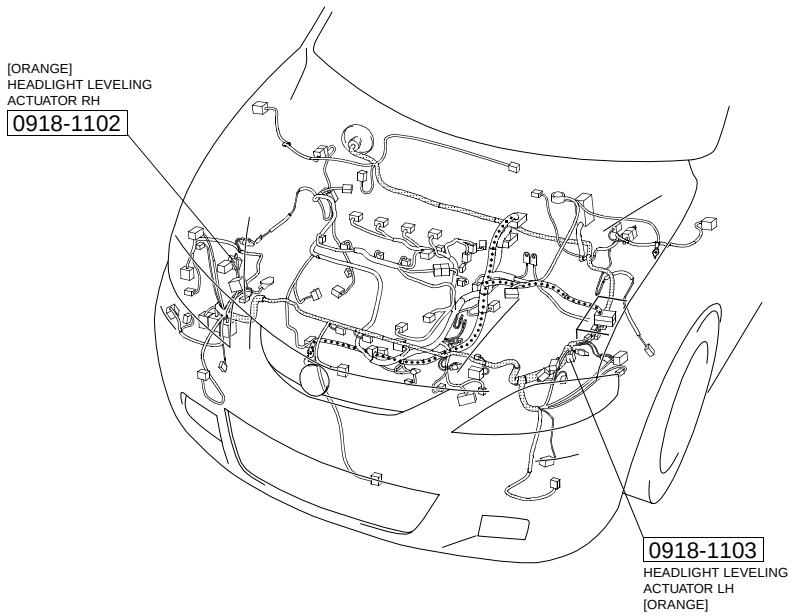

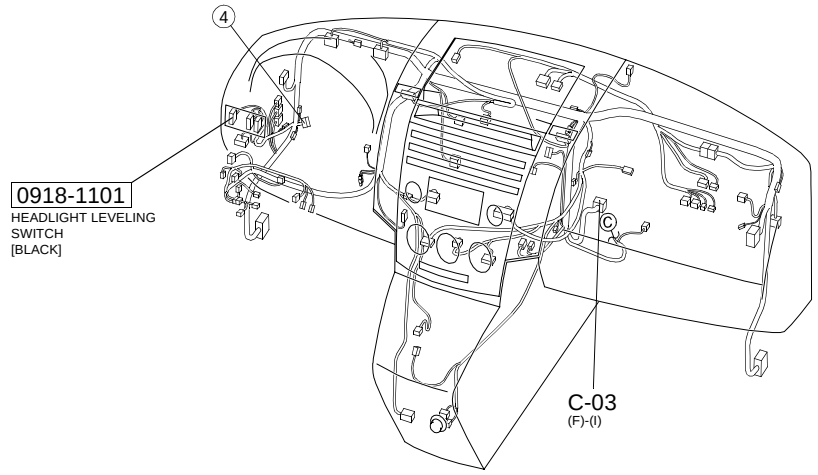

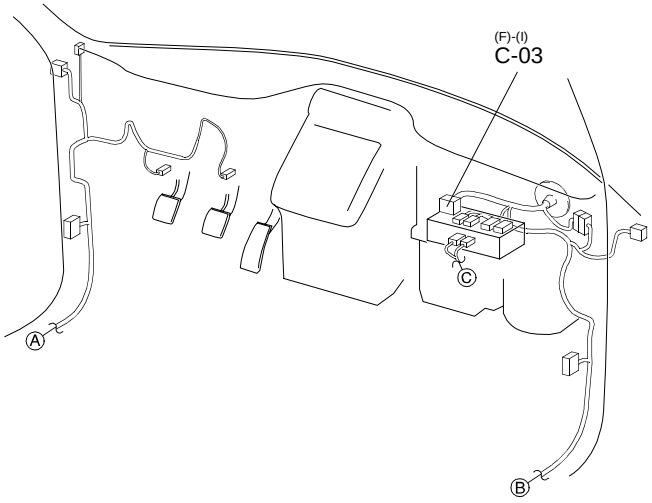

cardiagn.com

HEADLIGHT AUTO LEVELING SYSTEM

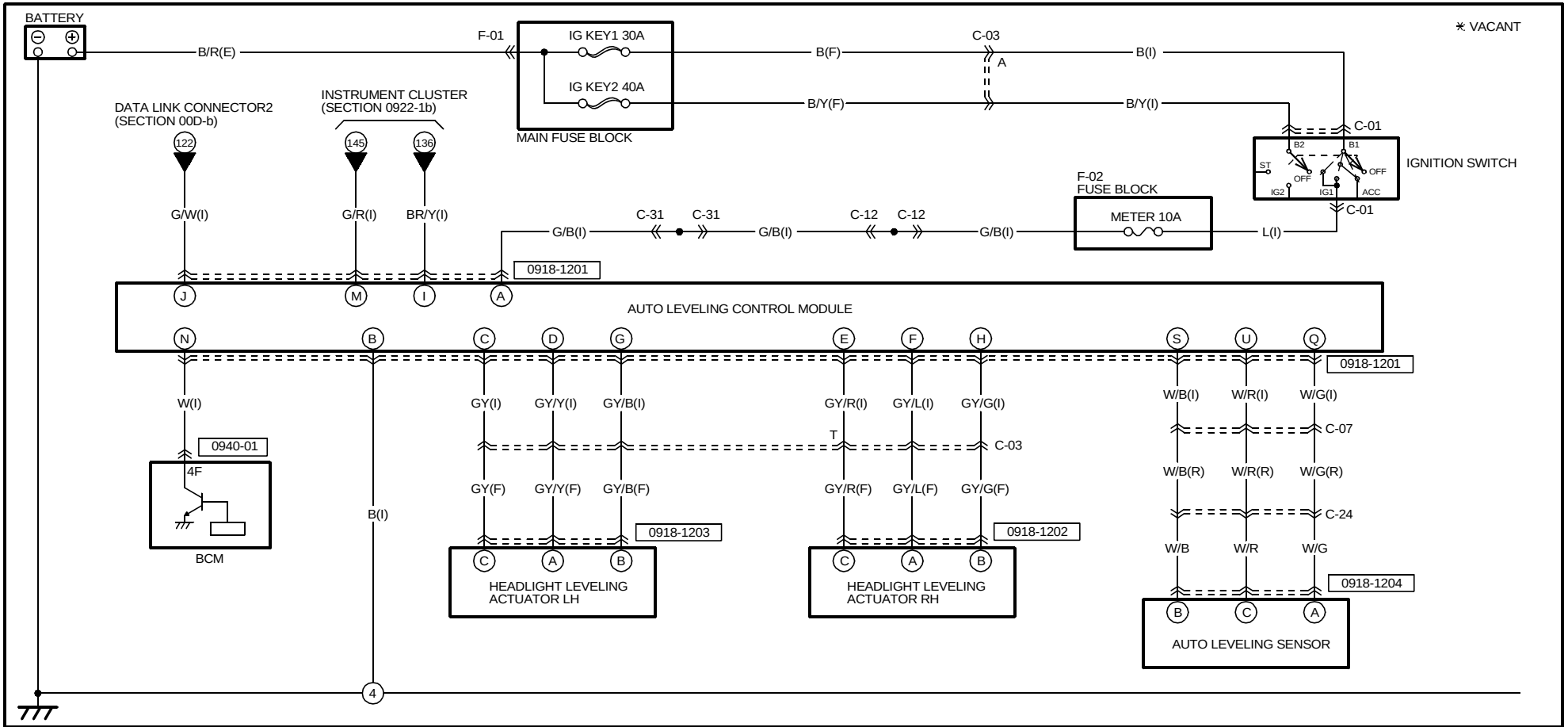

0918-1201
AUTO LEVELING CONTROL MODULE(I)

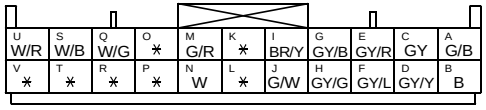

0918-1202
HEADLIGHT LEVELING
ACTUATOR RH(F)

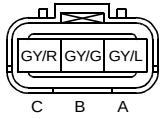

0918-1203
HEADLIGHT LEVELING
ACTUATOR LH(F)

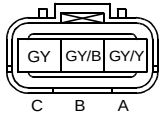

0918-1204
AUTO LEVELING SENSOR
(SHORT CORD)

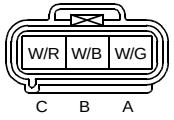

0940-01
BCM

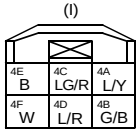

cardiagn.com

HARNESS SYMBOL : (F) (E) (R)

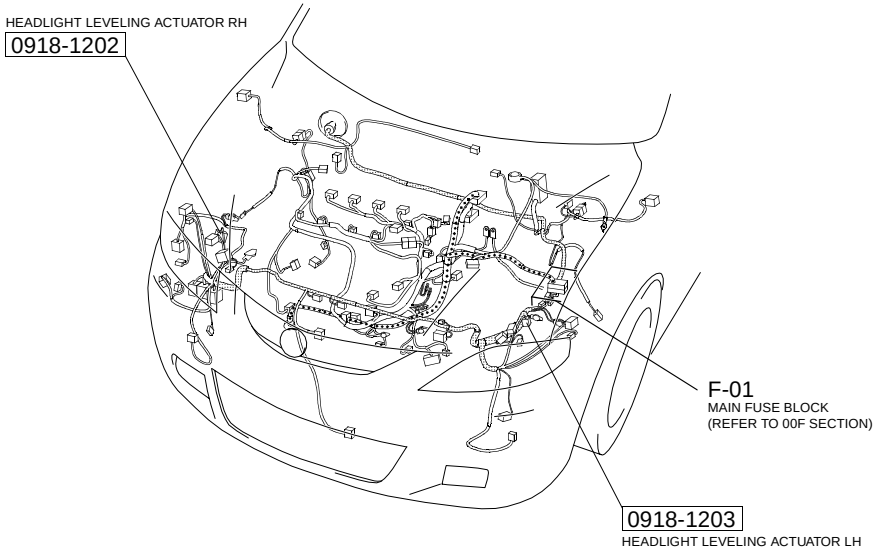

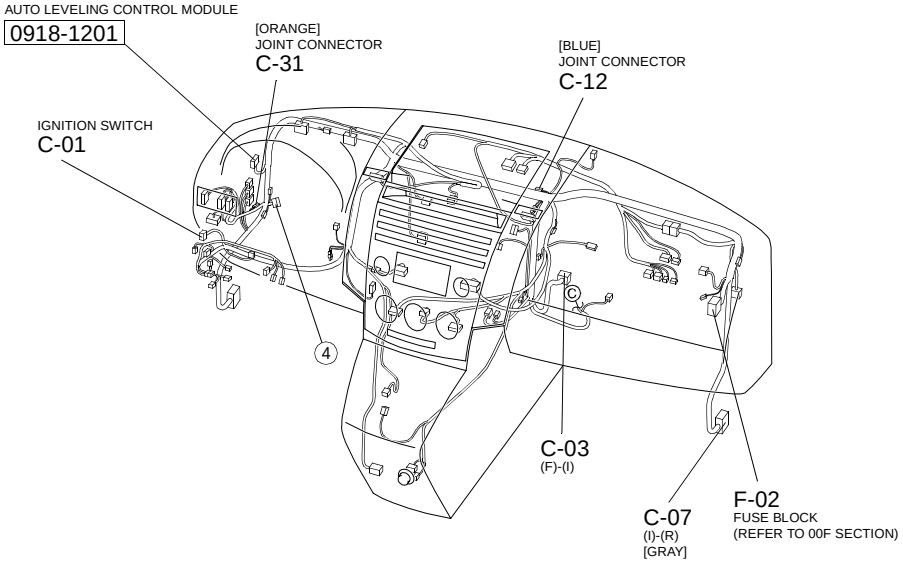

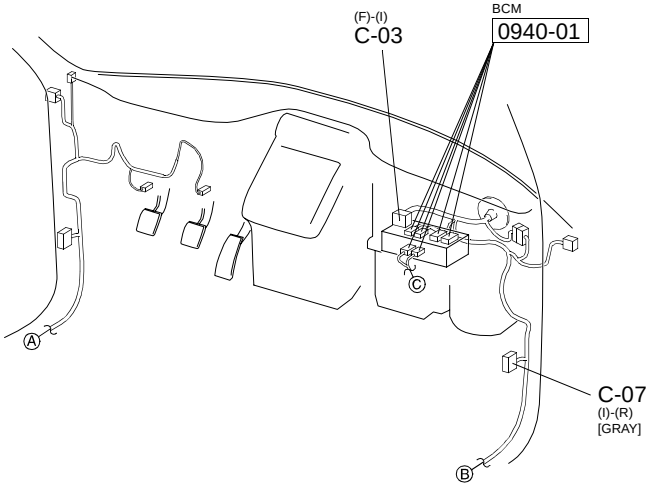

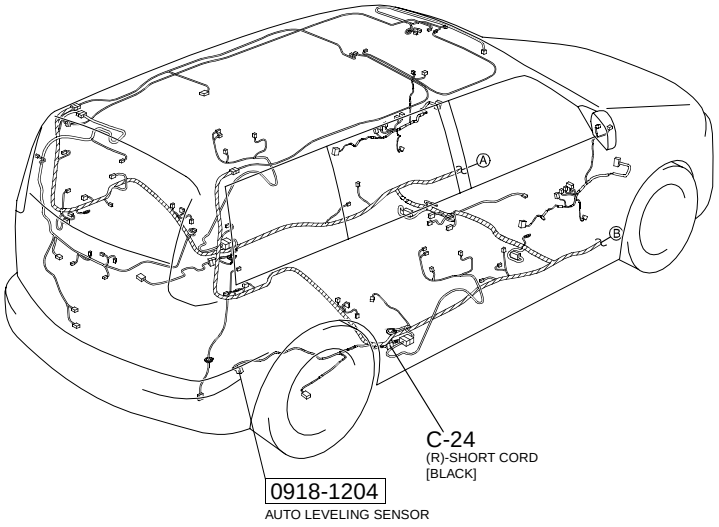

cardiagn.com

WINDSHIELD WIPER AND WASHER

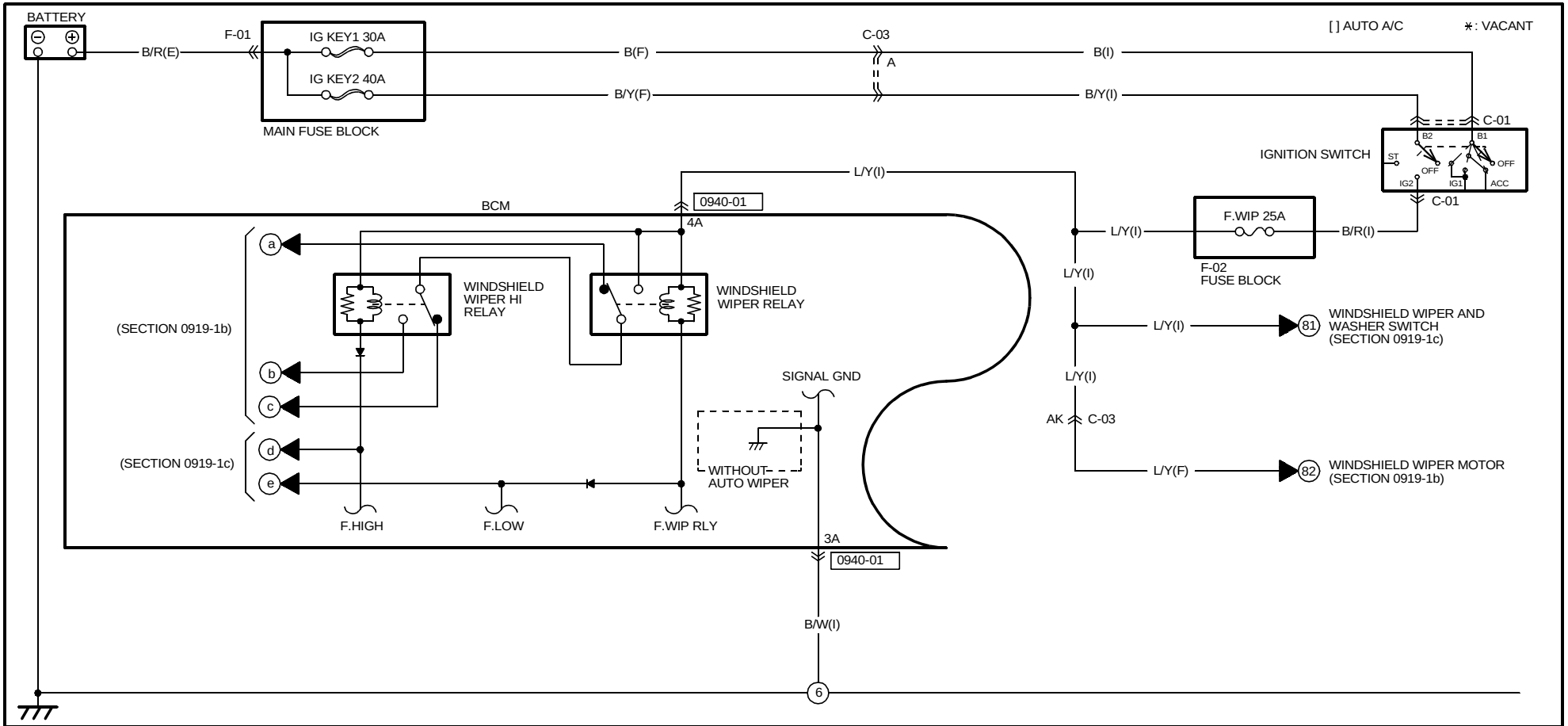

0940-01
BCM

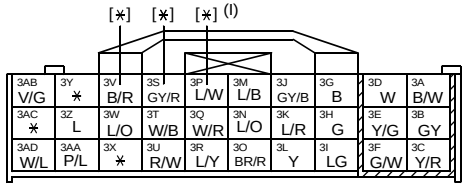

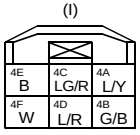

cardiagn.com

HARNESS SYMBOL : (F) (E) (R)

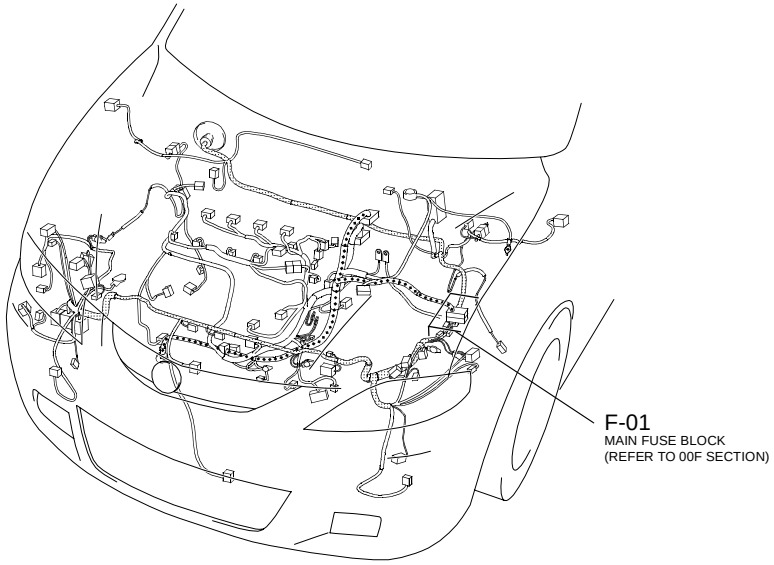

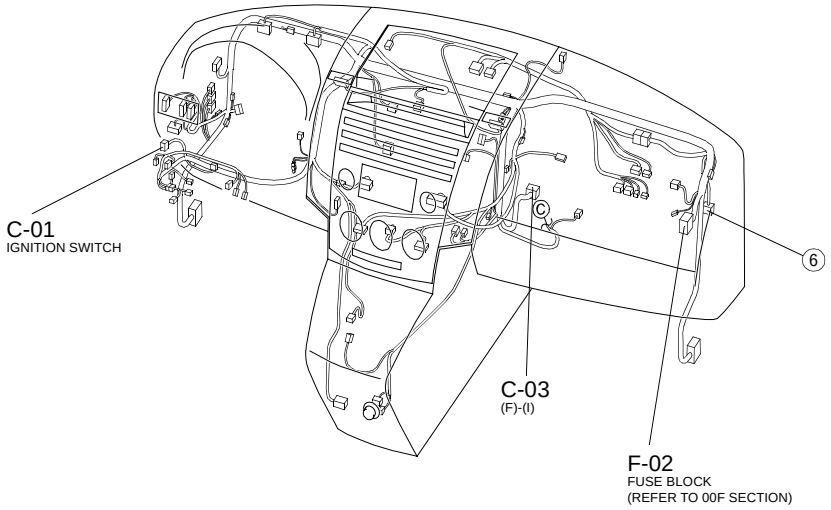

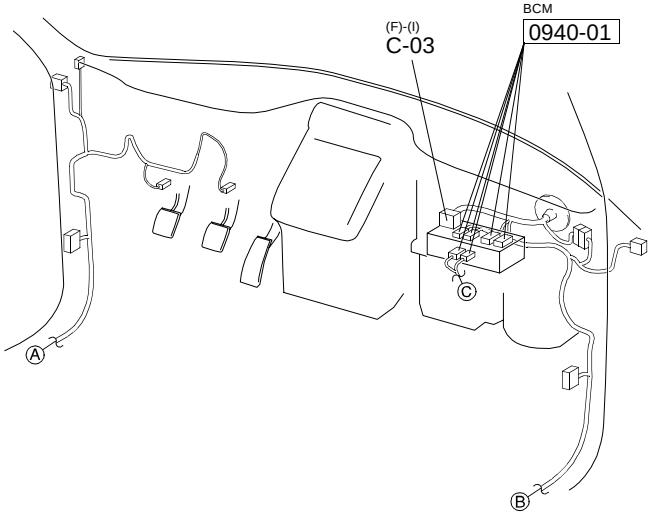

cardiagn.com

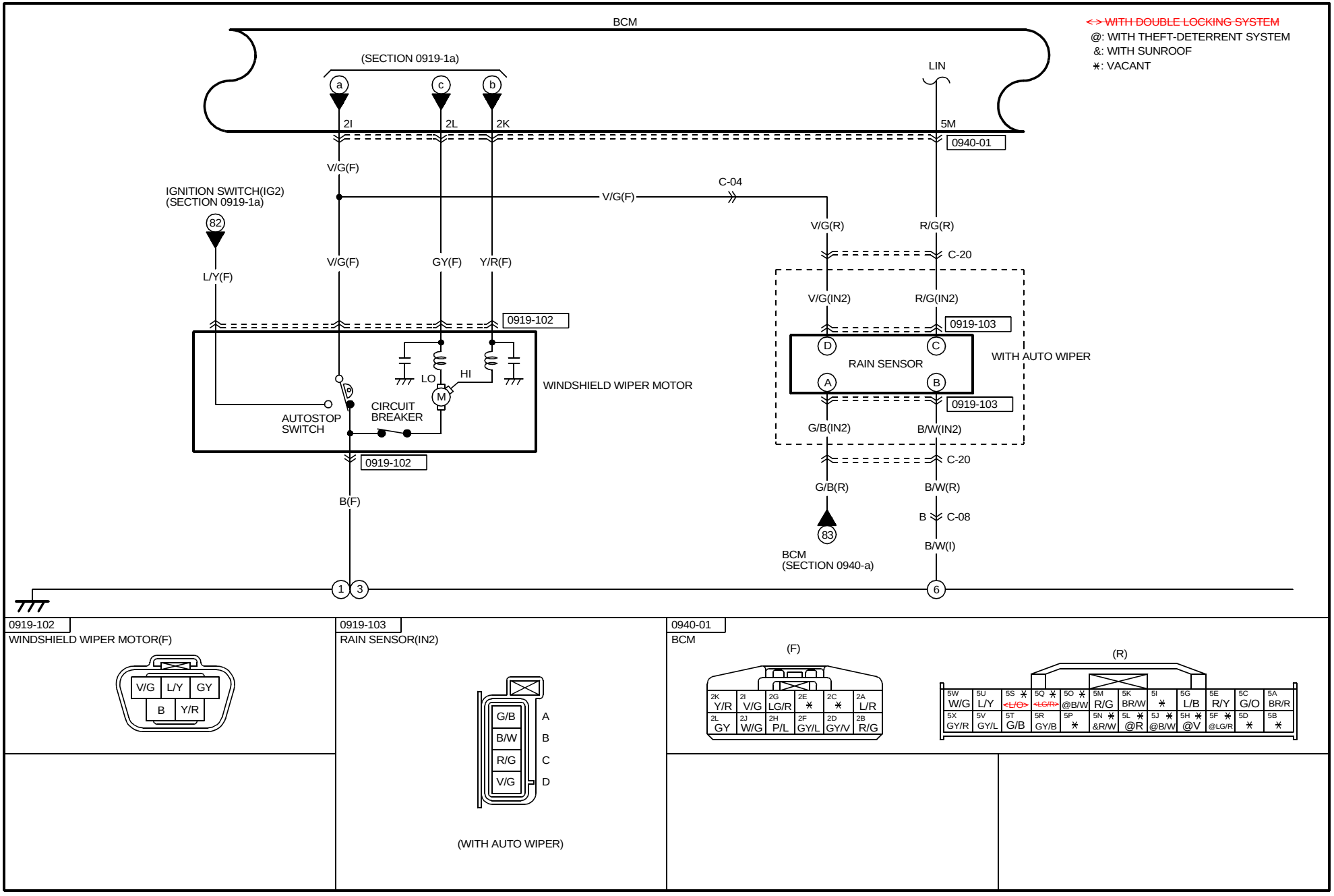

cardiagn.com

HARNESS SYMBOL : (F) (E) (R)

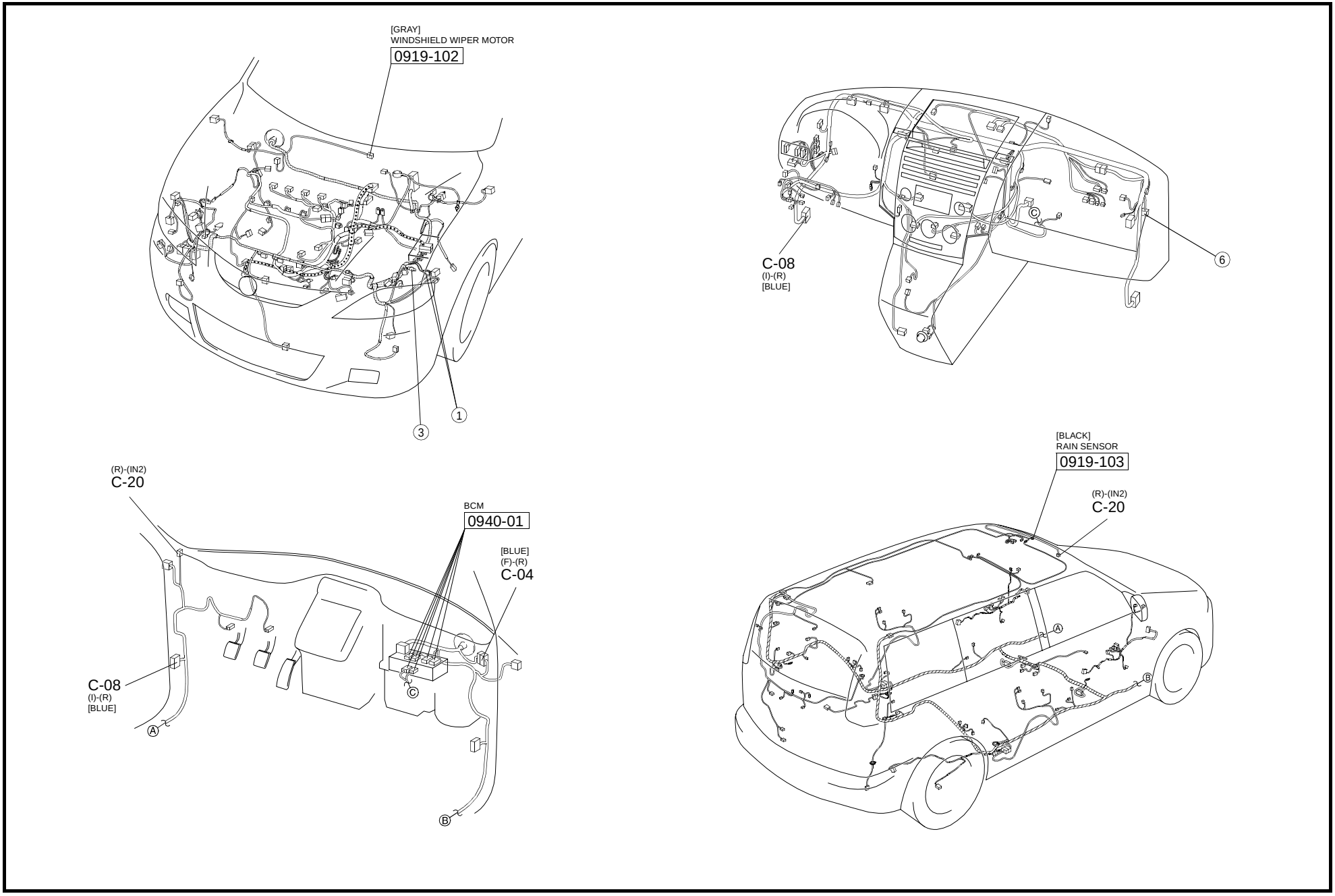

cardiagn.com

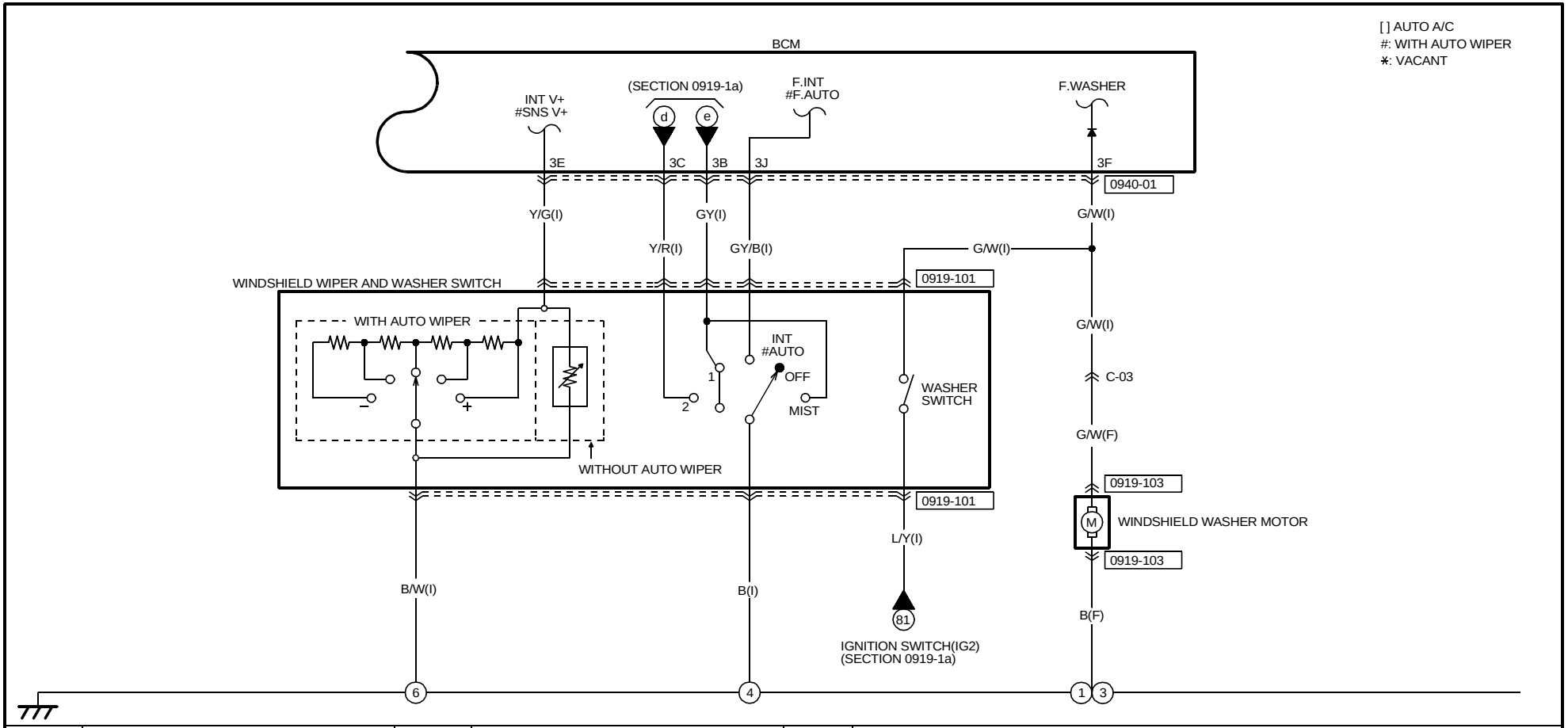

0919-101
WINDSHIELD WIPER AND WASHER SWITCH(I)

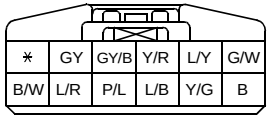

0919-103
WINDSHIELD WASHER MOTOR(F)

0940-01
BCM

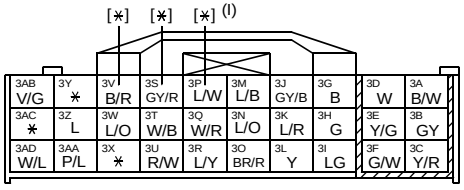

cardiagn.com

HARNESS SYMBOL : (F) (E) (R)

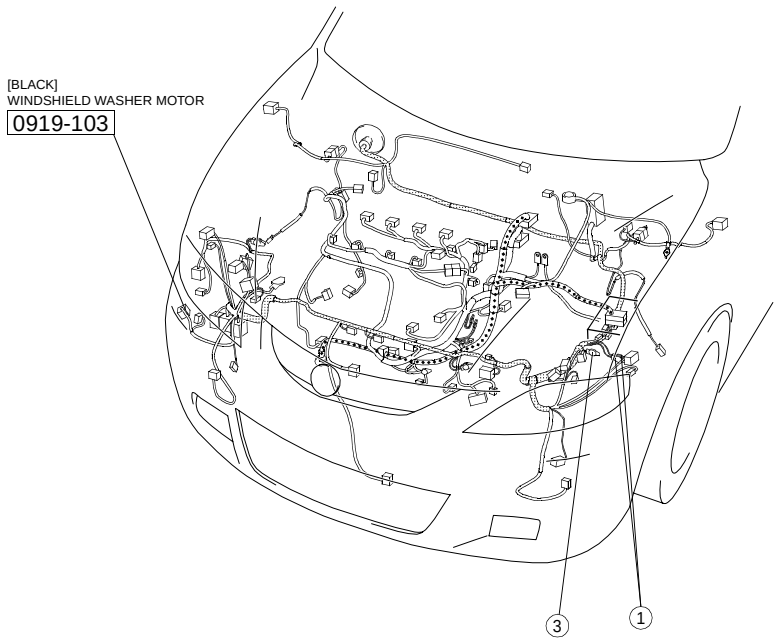

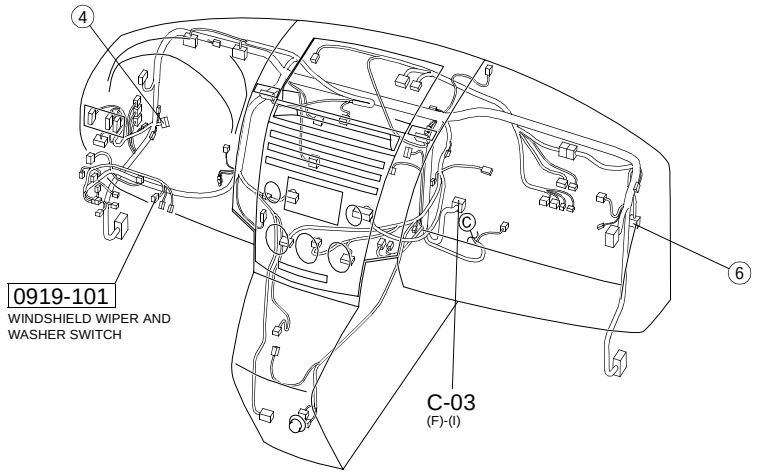

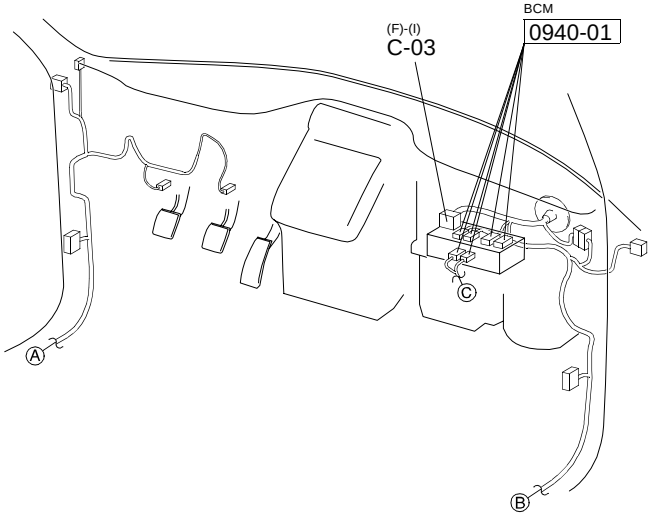

cardiagn.com

REAR WIPER AND WASHER

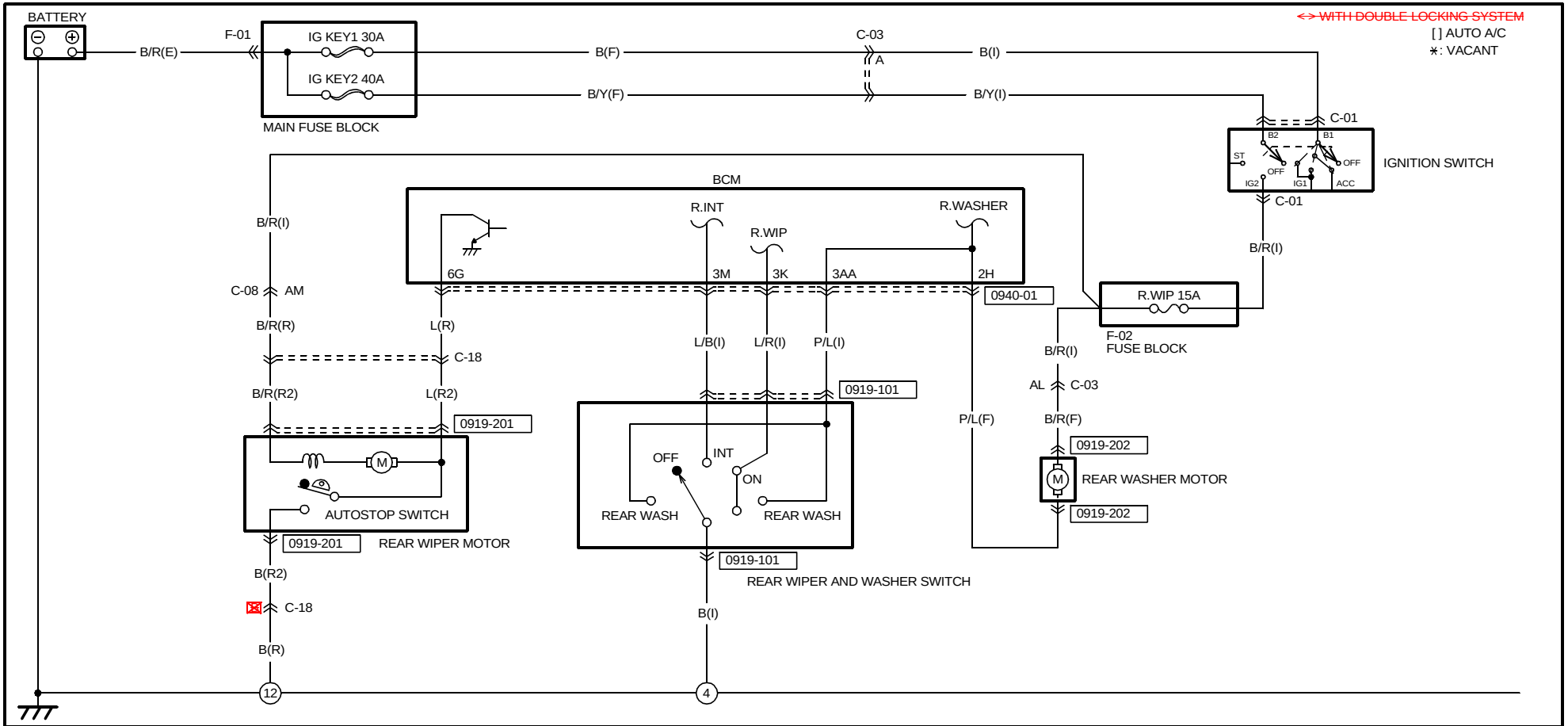

0919-201
REAR WIPER MOTOR(R2)

B	L	B/R

0919-202
REAR WASHER MOTOR(F)

P/L	B/R

0919-101
REAR WIPER AND WASHER SWITCH(I)

*	GY	GY/B	Y/R	L/Y	G/W
B/W	L/R	P/L	L/B	Y/G	B

0940-01
BCM

(F)

2K Y/R	2I V/G	2G LG/R	2E *	2C *	2A L/R
2L GY	2J W/G	2H P/L	2F GY/L	2D GY/V	2B R/G

[*] [*] [*] (I)

3AB V/G	3Y *	3V B/R	3S GY/R	3P L/W	3M L/B	3J GY/B	3G B	3D W	3A B/W
3AC *	3Z L	3W L/O	3T W/B	3Q W/R	3N L/O	3K L/R	3H G	3E Y/G	3B GY
3AD W/L	3AA P/L	3X *	3U R/W	3R L/Y	3O BR/R	3L Y	3I LG	3F G/W	3C Y/R

(R)

6I Y	6G L		6A R/L
6J L/R	6H G/Y	6F * ~~Y/G~~	6D *	6B R/B

cardiagn.com

HARNESS SYMBOL : (F) (E) (R)

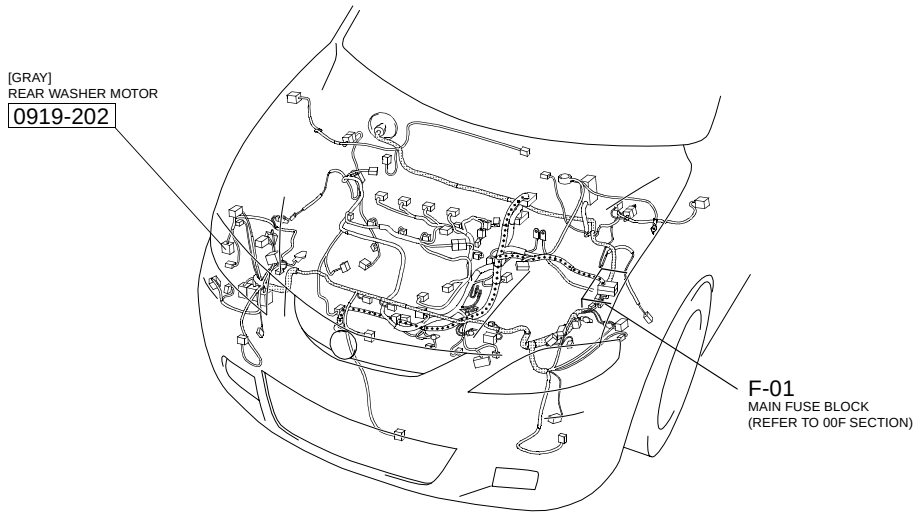

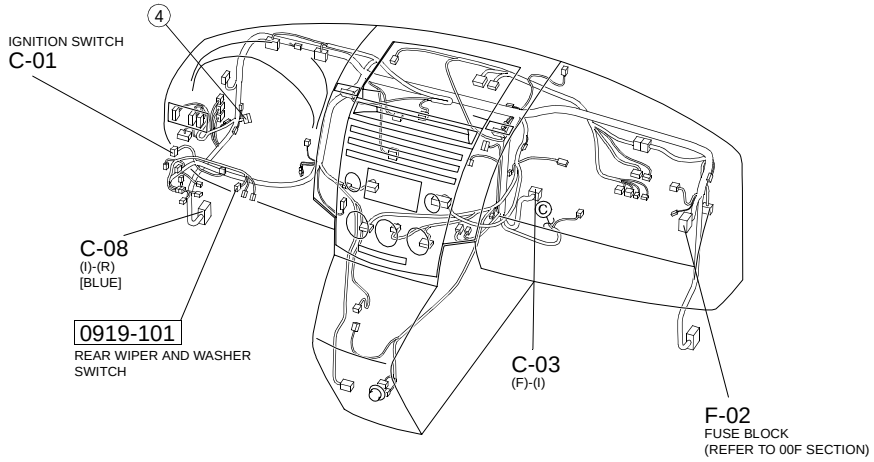

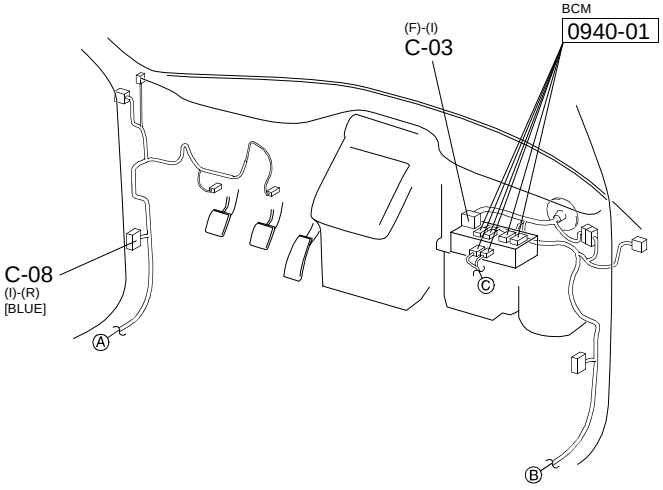

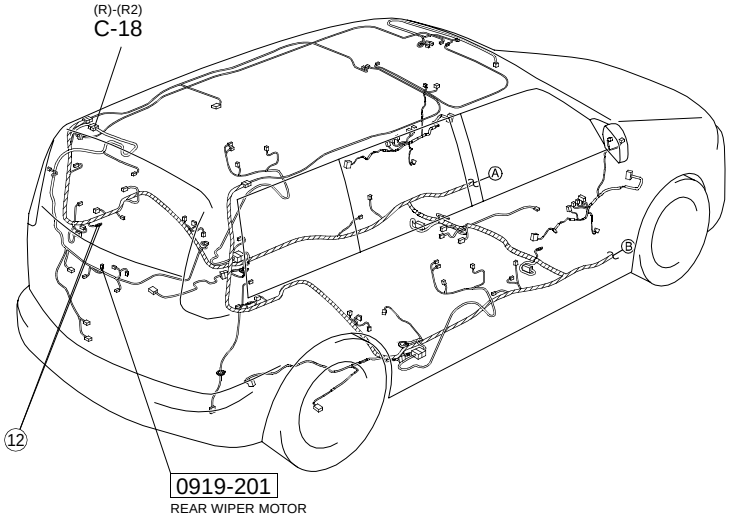

cardiagn.com

HEADLIGHT CLEANER

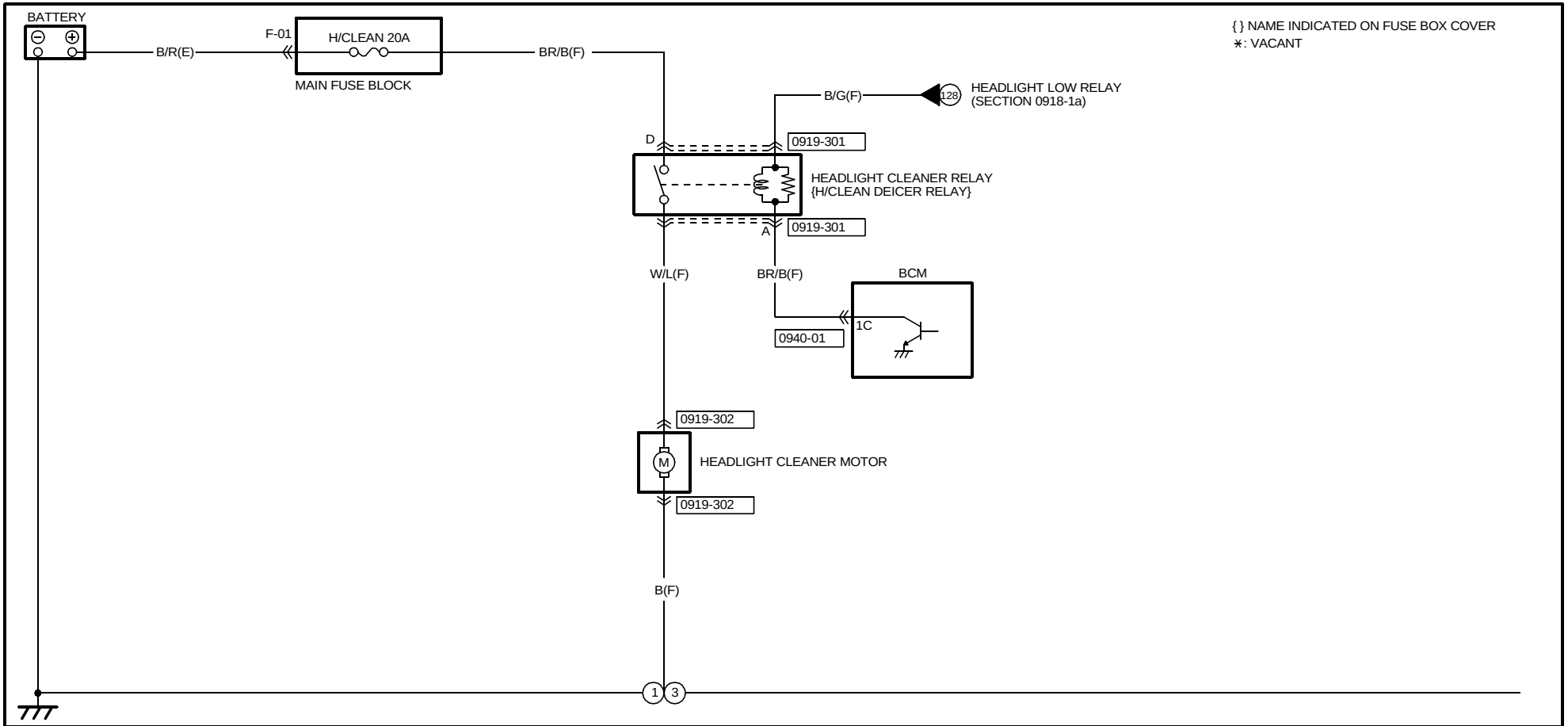

0919-301	0919-302	0940-01		
HEADLIGHT CLEANER RELAY(F)	HEADLIGHT CLEANER MOTOR (F)	BCM		

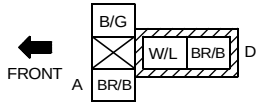

NOTE:SEEN FROM TERMINAL SIDE

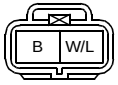

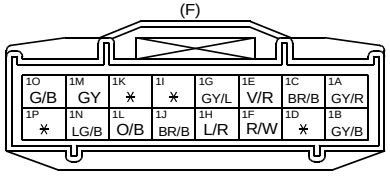

cardiagn.com

HARNESS SYMBOL : (F) (E) (R)

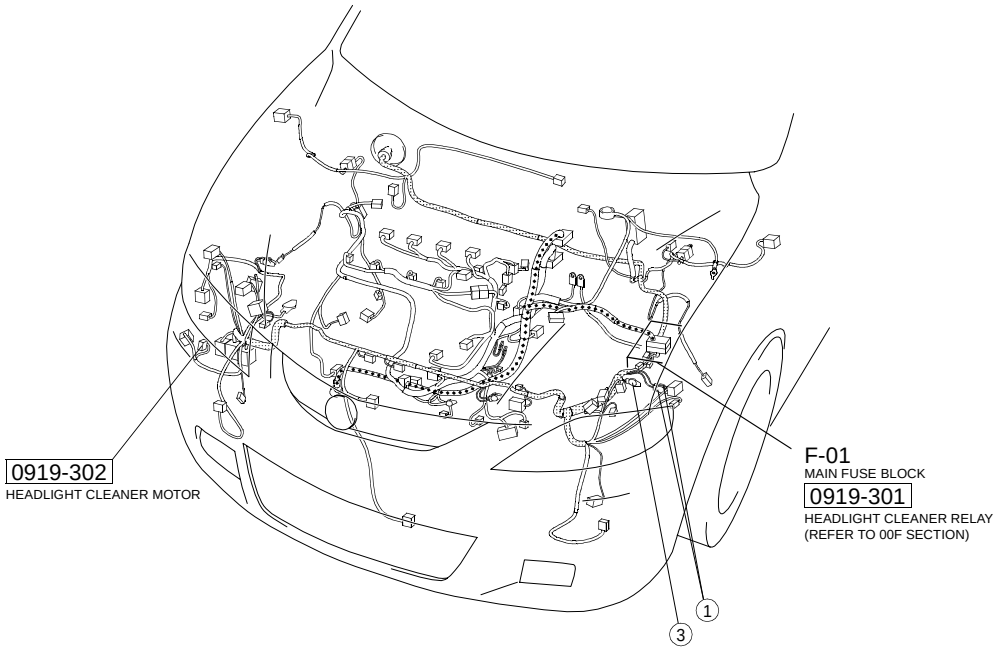

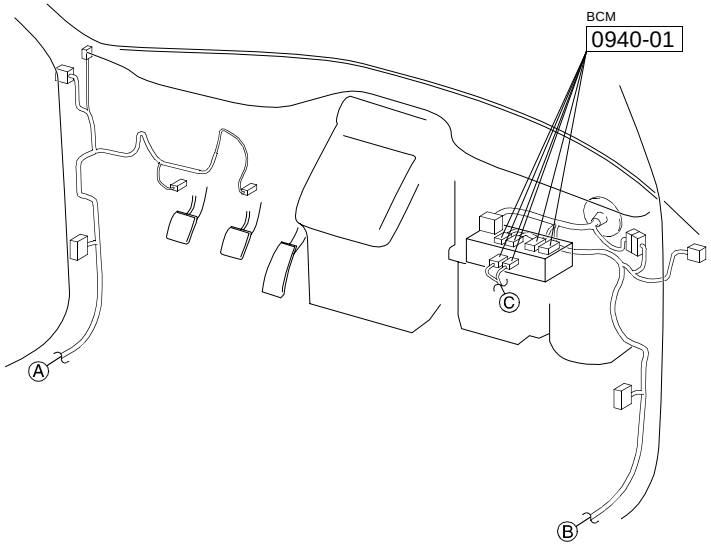

cardiagn.com

ACCESSORY SOCKET/CIGARETTE LIGHTER

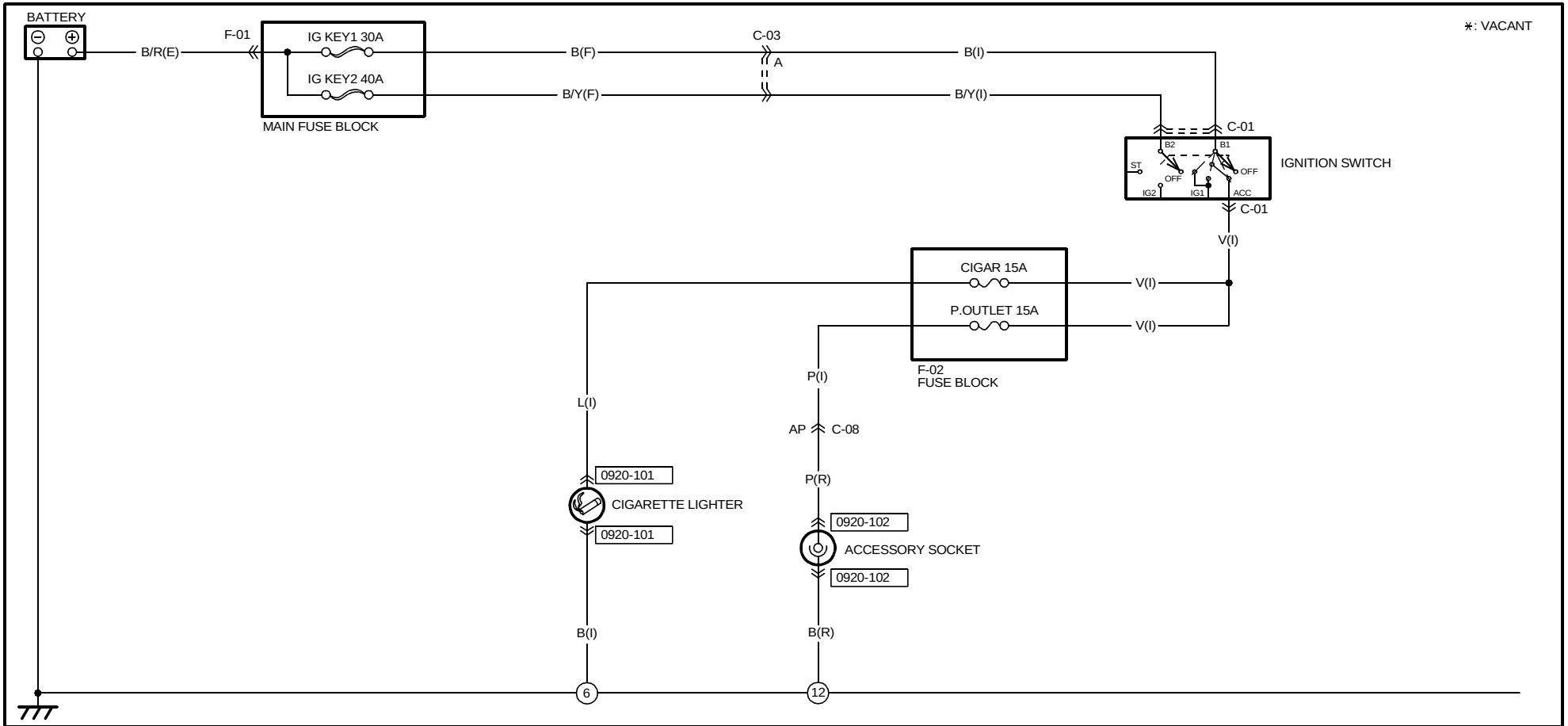

0920-101 CIGARETTE LIGHTER(I)	0920-102 ACCESSORY SOCKET(R)					
L ∗ B	P ∗ B					

cardiagn.com

HARNESS SYMBOL : (F) (E) (R)

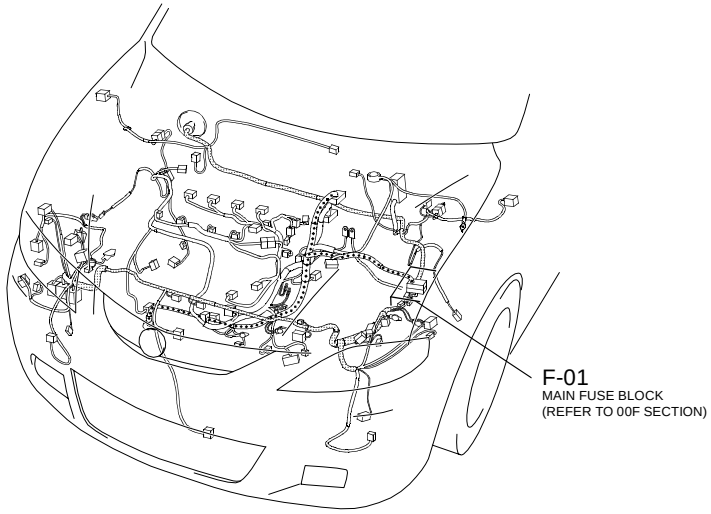

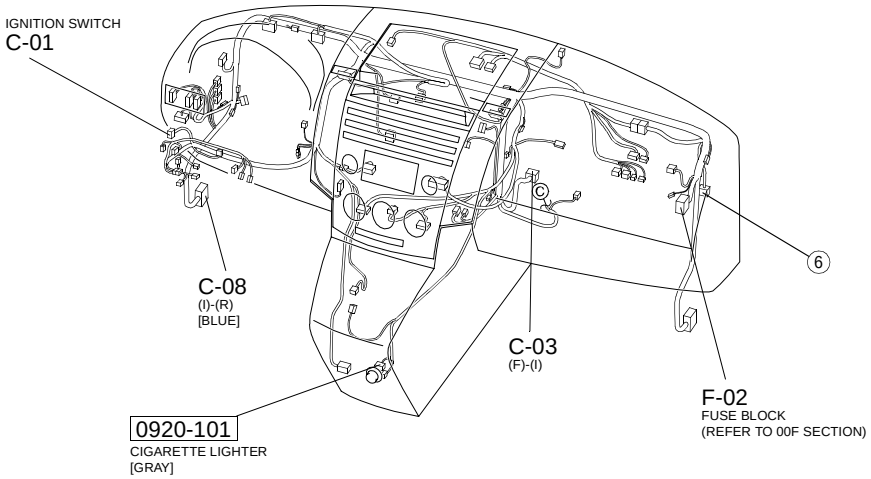

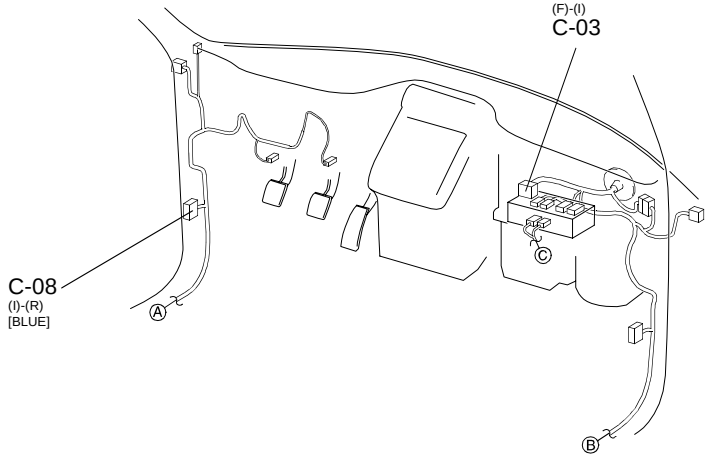

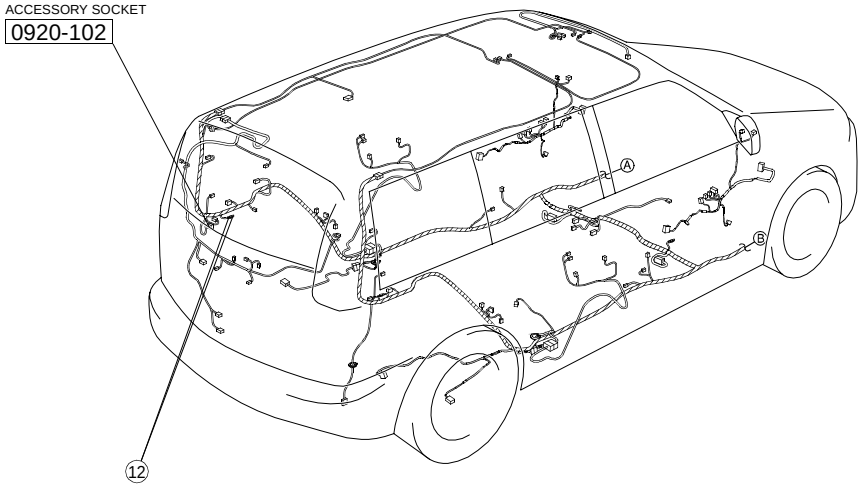

cardiagn.com

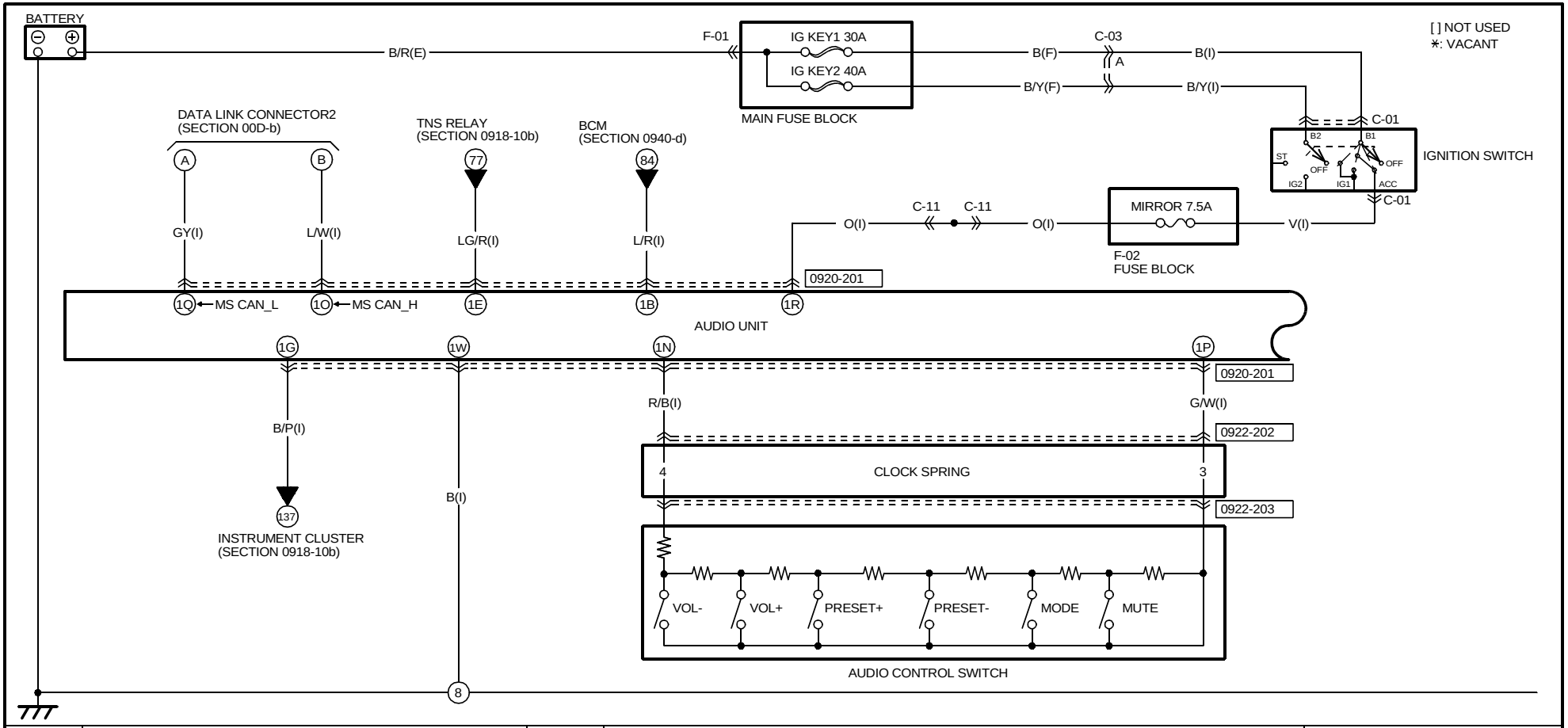

0920-201

AUDIO UNIT(I)

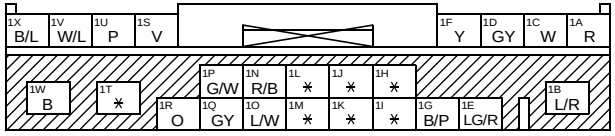

0922-202

INSTRUMENT PANEL(I)-CLOCK SPRING

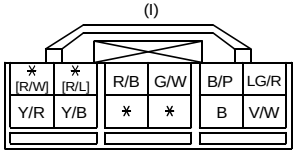

(CLOCK SPRING)

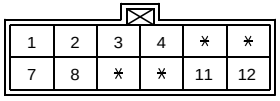

TERMINALS OF THIS CONNECTOR ARE INDICATED BY NUMBERS.

0922-203

AUDIO CONTROL SWITCH(CLOCK SPRING)

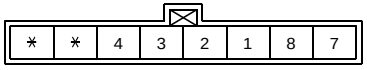

TERMINALS OF THIS CONNECTOR ARE INDICATED BY NUMBERS.

cardiagn.com

HARNESS SYMBOL : (F) (E) (R)

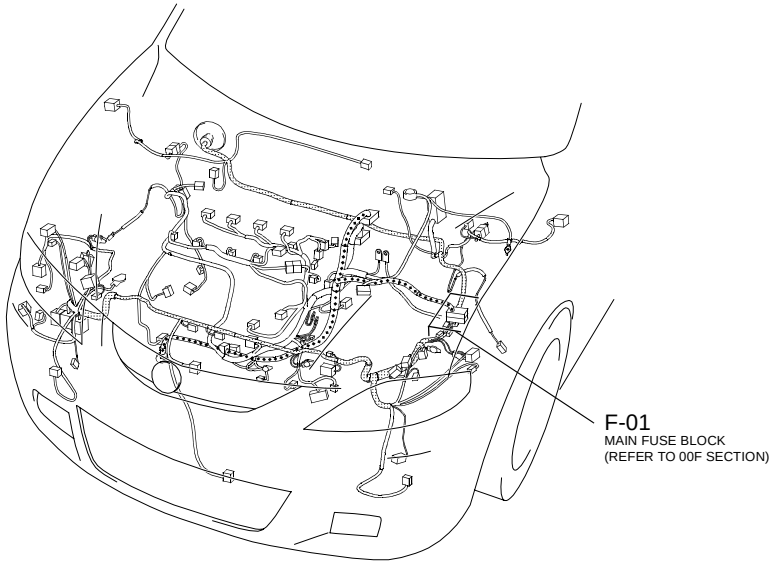

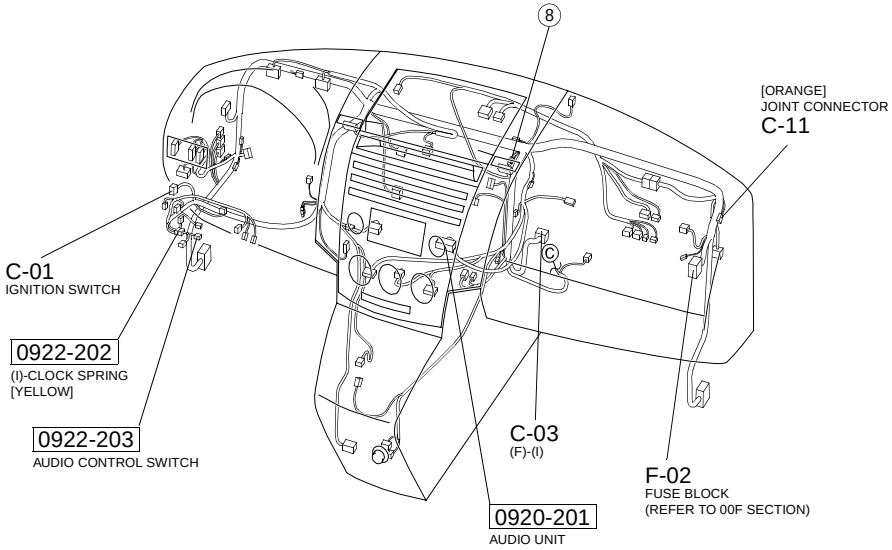

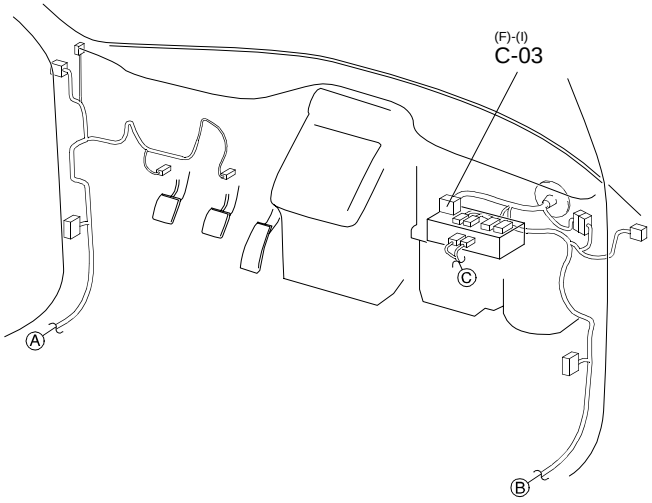

cardiagn.com

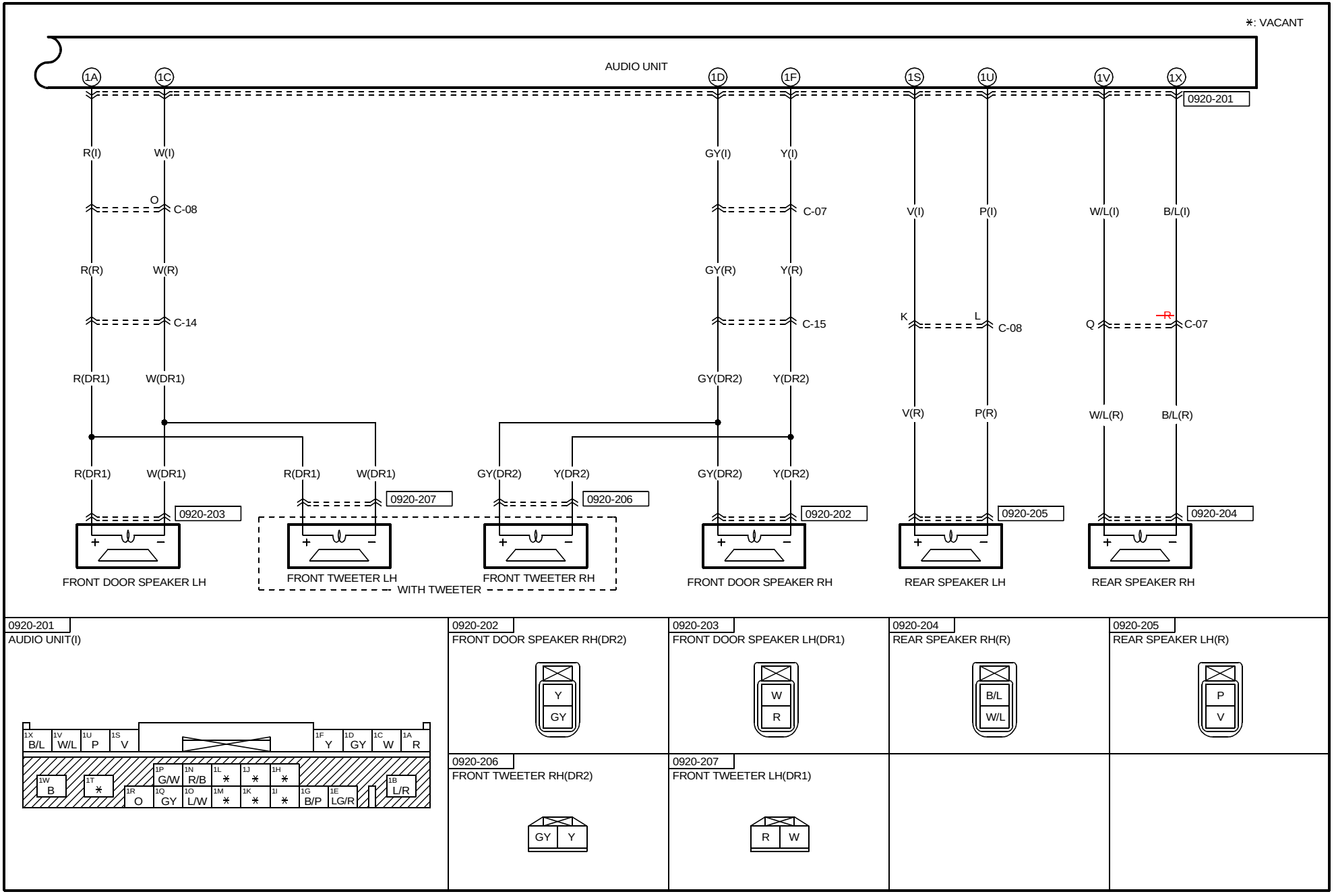

cardiagn.com

HARNESS SYMBOL : (F) (E) (R)

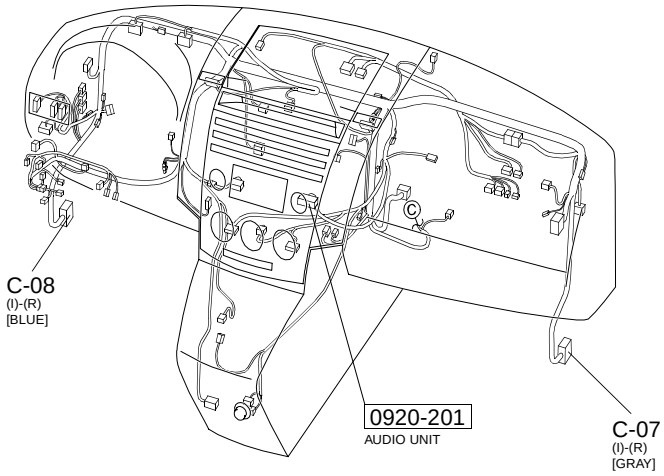

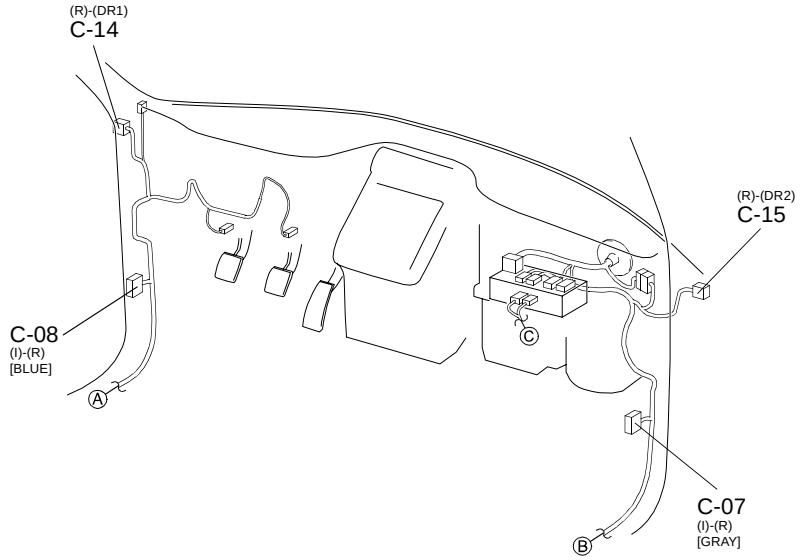

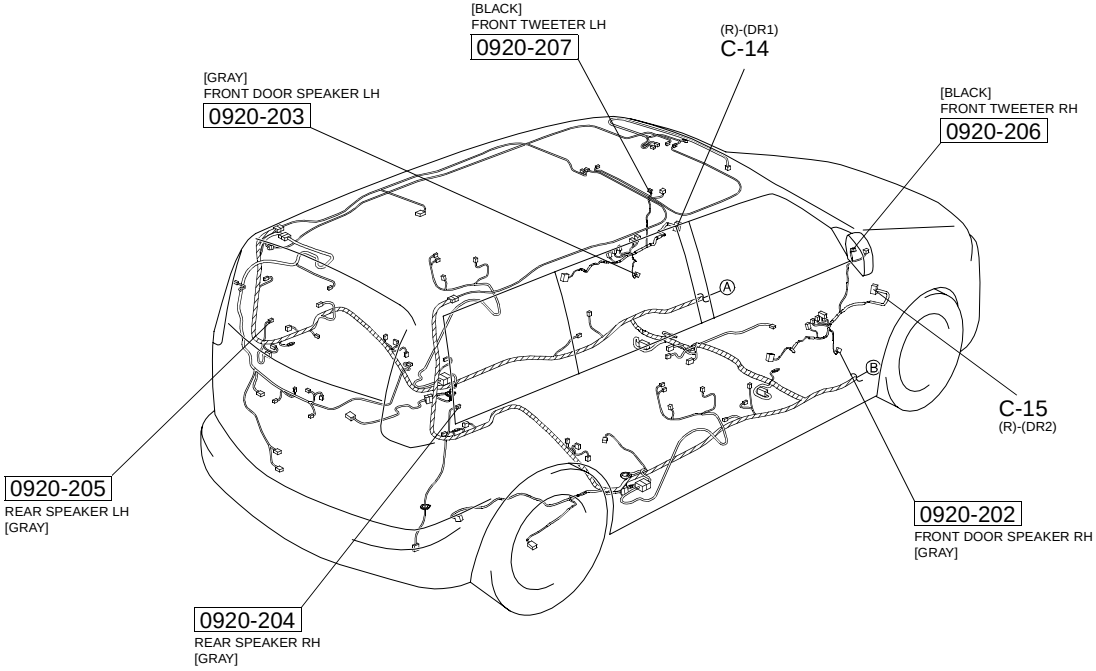

cardiagn.com

AUDIO SYSTEM (WITH CAR-NAVIGATION SYSTEM)

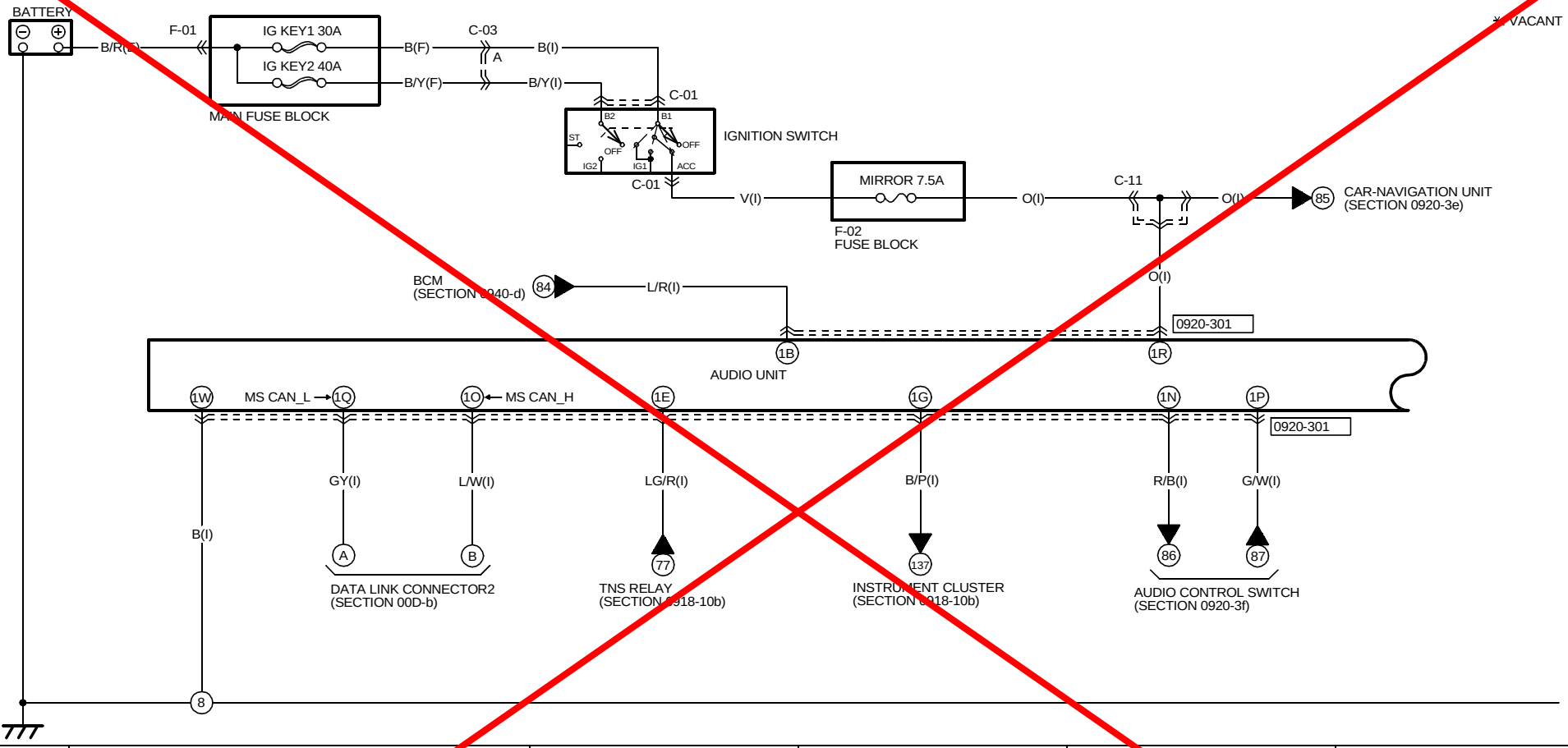

0920-301
AUDIO UNIT(I)

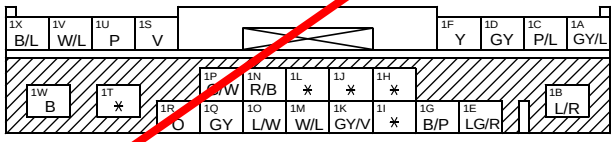

cardiagn.com

HARNESS SYMBOL : (F) (E) (R)

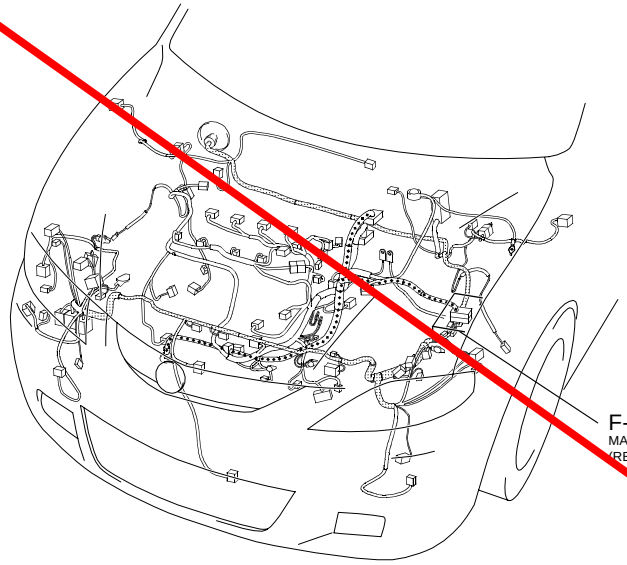

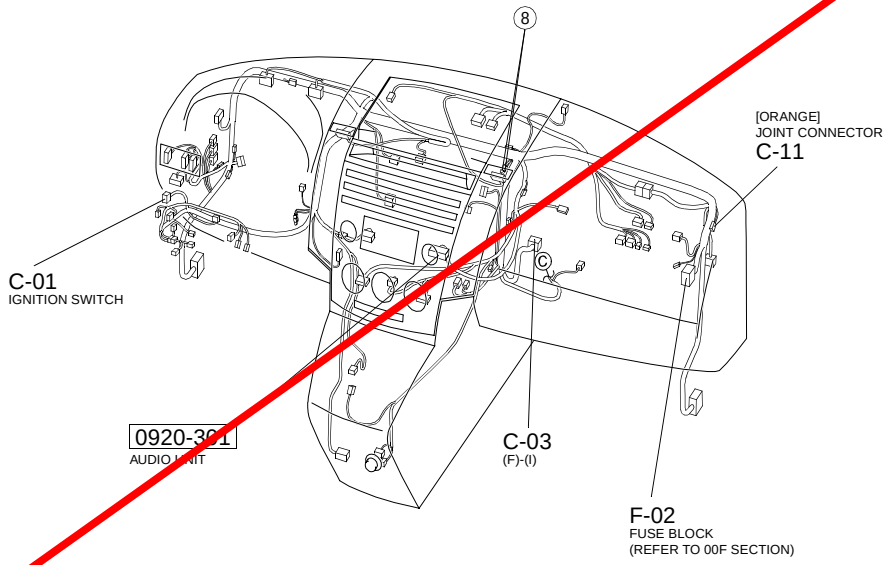

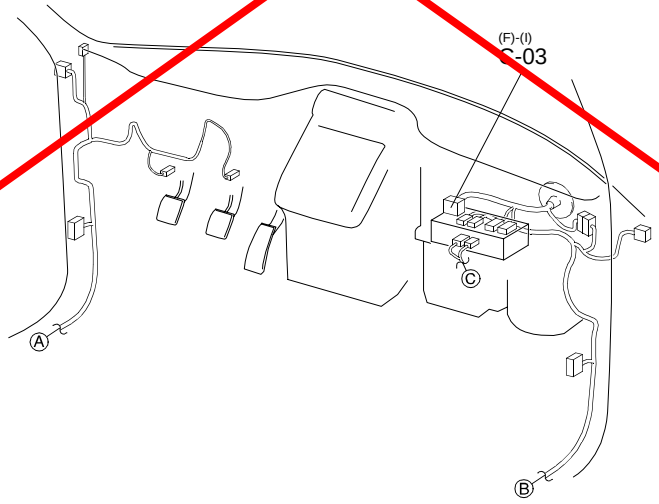

cardiagn.com

AUDIO SYSTEM (WITH CAR-NAVIGATION SYSTEM)

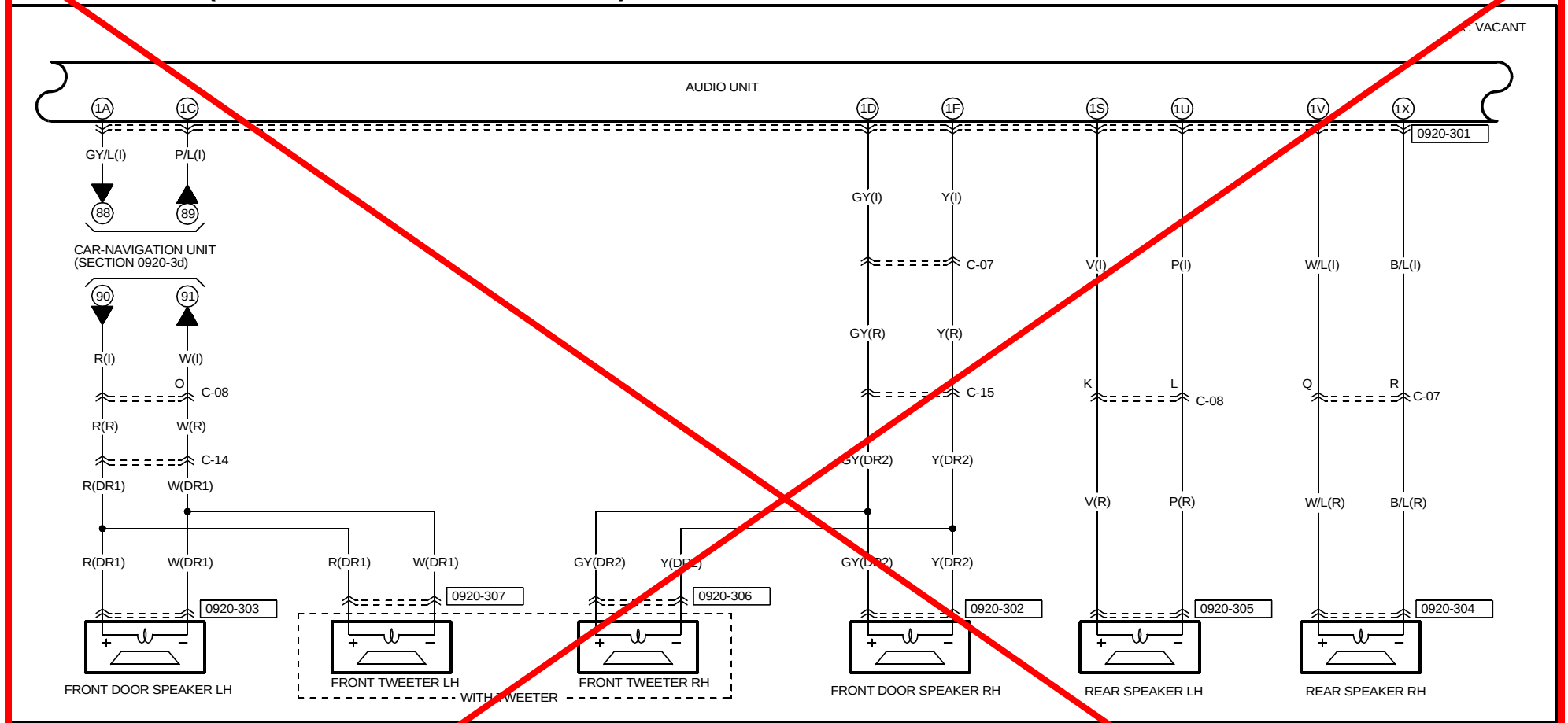

0920-301
AUDIO UNIT(I)

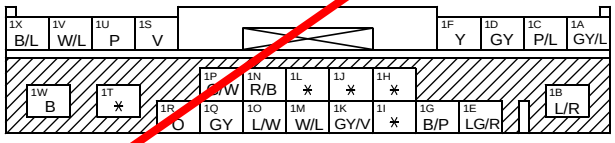

0920-302
FRONT DOOR SPEAKER RH(DR2)

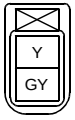

0920-303
FRONT DOOR SPEAKER LH(DR1)

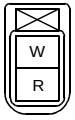

0920-304
REAR SPEAKER RH(R)

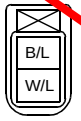

0920-305
REAR SPEAKER LH(R)

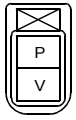

0920-306
FRONT TWEETER RH(DR2)

0920-307
FRONT TWEETER LH(DR1)

cardiagn.com

HARNESS SYMBOL : (F) (E) (R)

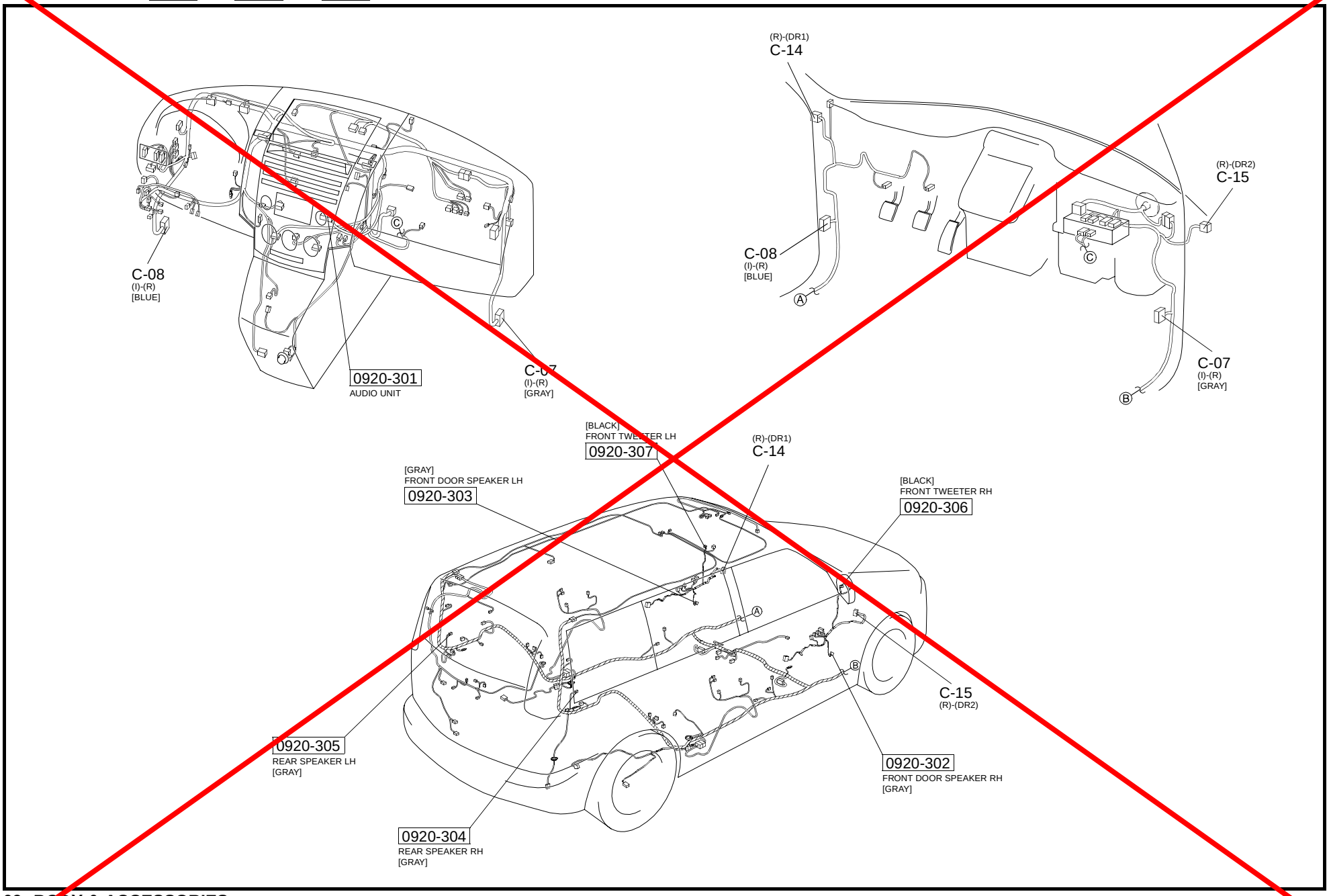

cardiagn.com

AUDIO SYSTEM (WITH CAR-NAVIGATION SYSTEM)

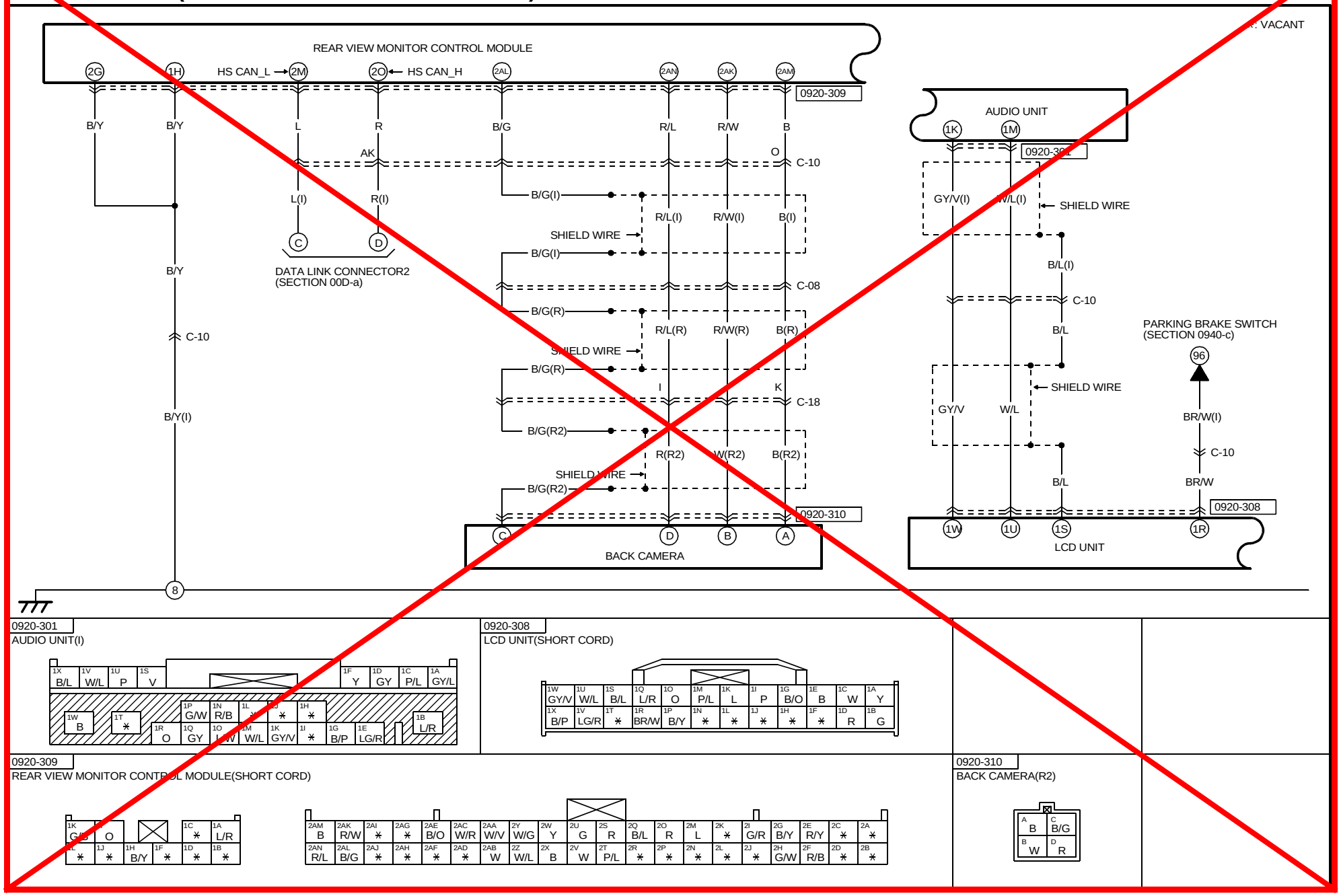

0920-301
AUDIO UNIT(I)

0920-308
LCD UNIT(SHORT CORD)

0920-309
REAR VIEW MONITOR CONTROL MODULE(SHORT CORD)

0920-310
BACK CAMERA(R2)

cardiagn.com

HARNESS SYMBOL : (F) (E) (R)

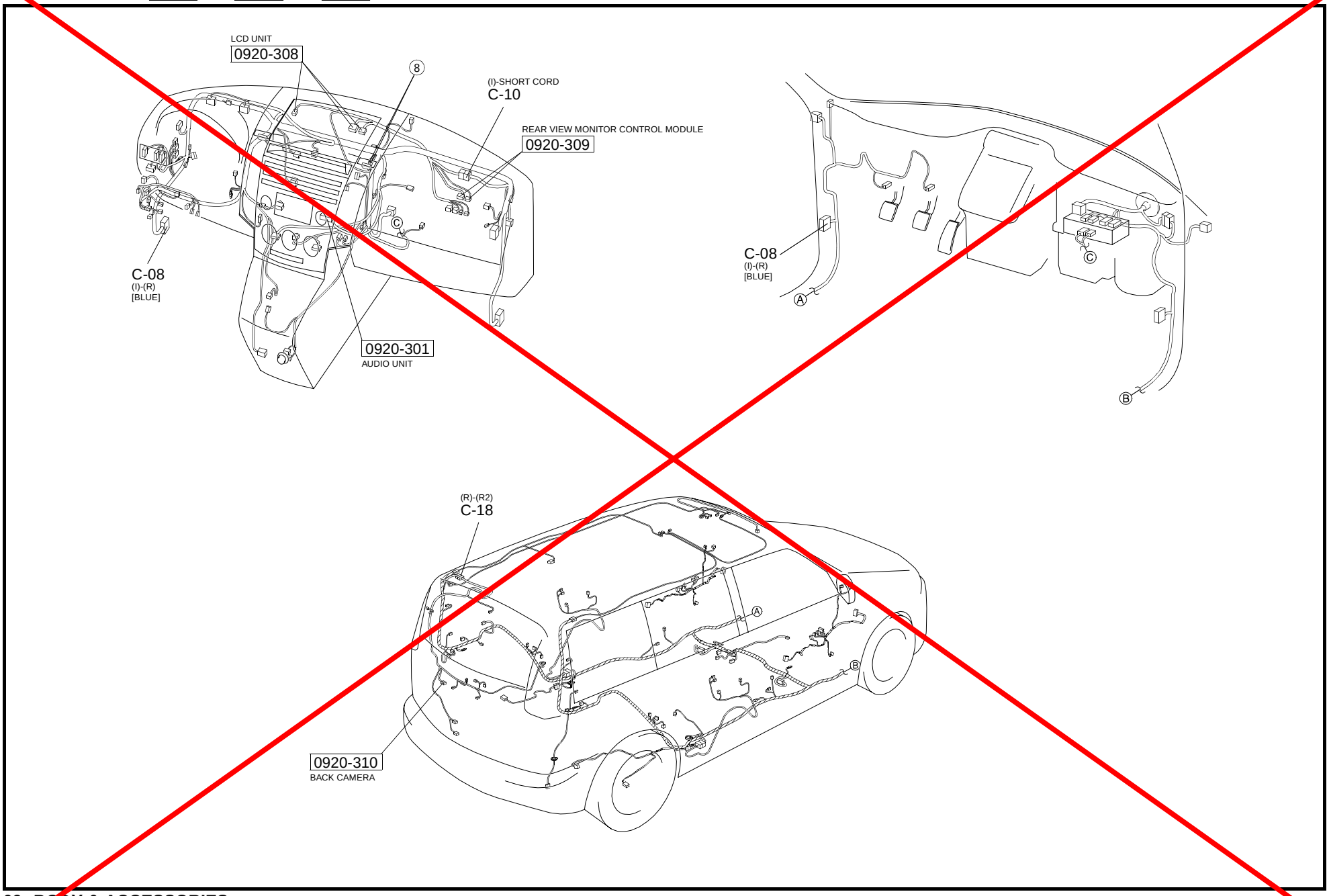

cardiagn.com

AUDIO SYSTEM (WITH CAR-NAVIGATION SYSTEM)

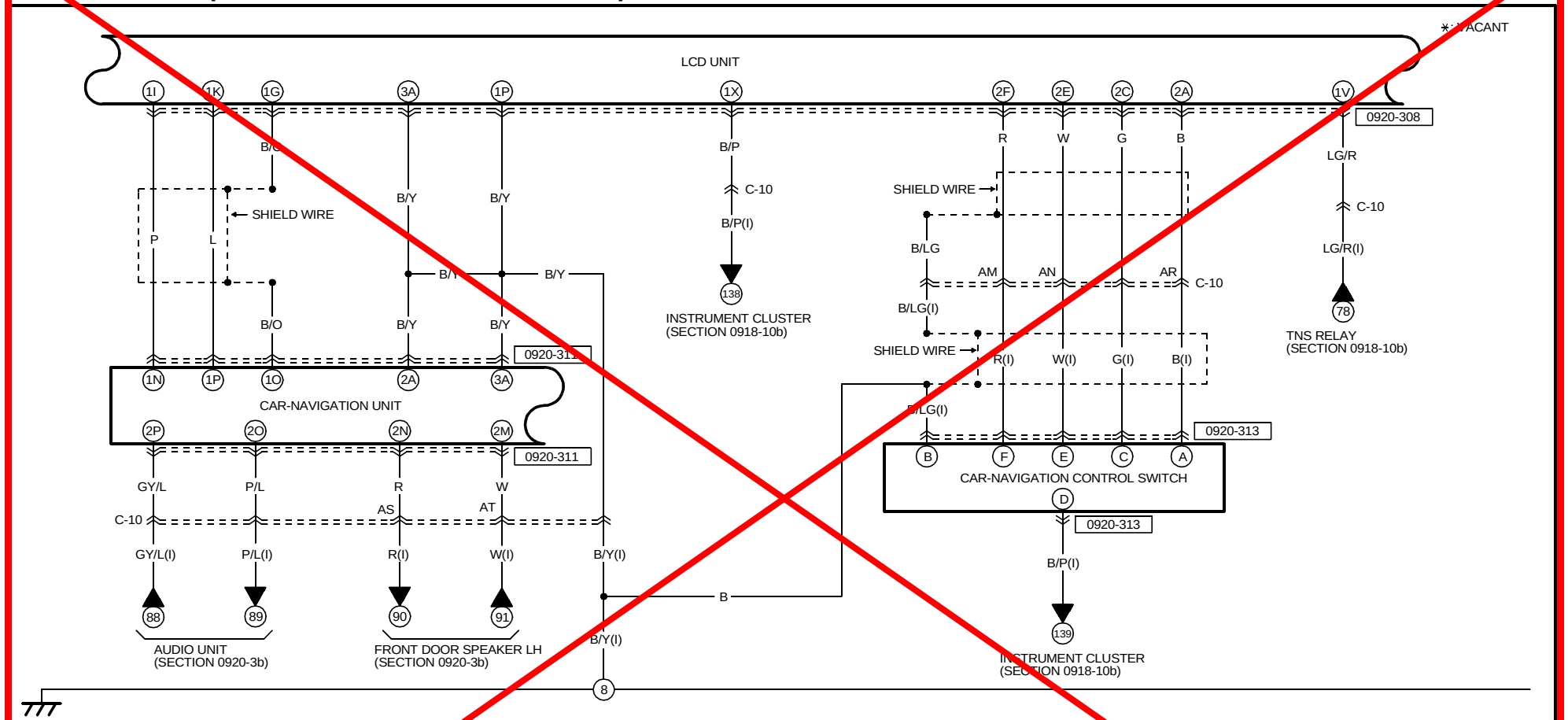

0920-308
LCD UNIT(SHORT CORD)

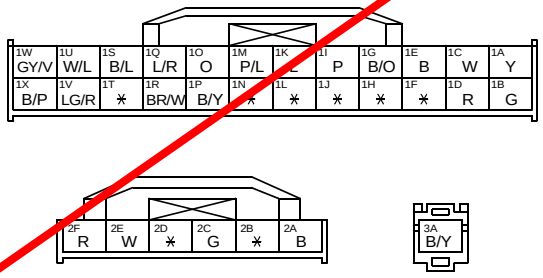

0920-311
CAR-NAVIGATION UNIT(SHORT CORD)

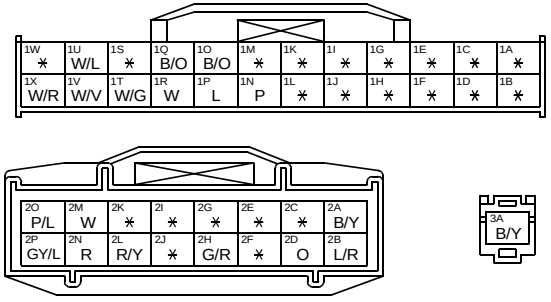

0920-313
CAR-NAVIGATION CONTROL SWITCH(I)

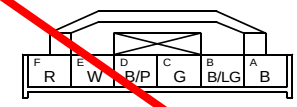

cardiagn.com

HARNESS SYMBOL : (F) (E) (R)

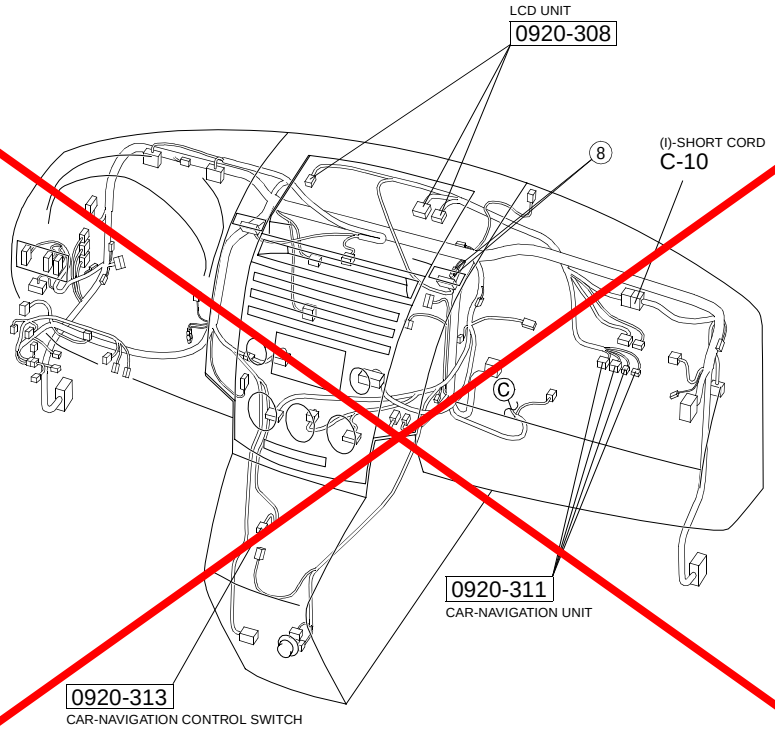

cardiagn.com

AUDIO SYSTEM (WITH CAR-NAVIGATION SYSTEM)

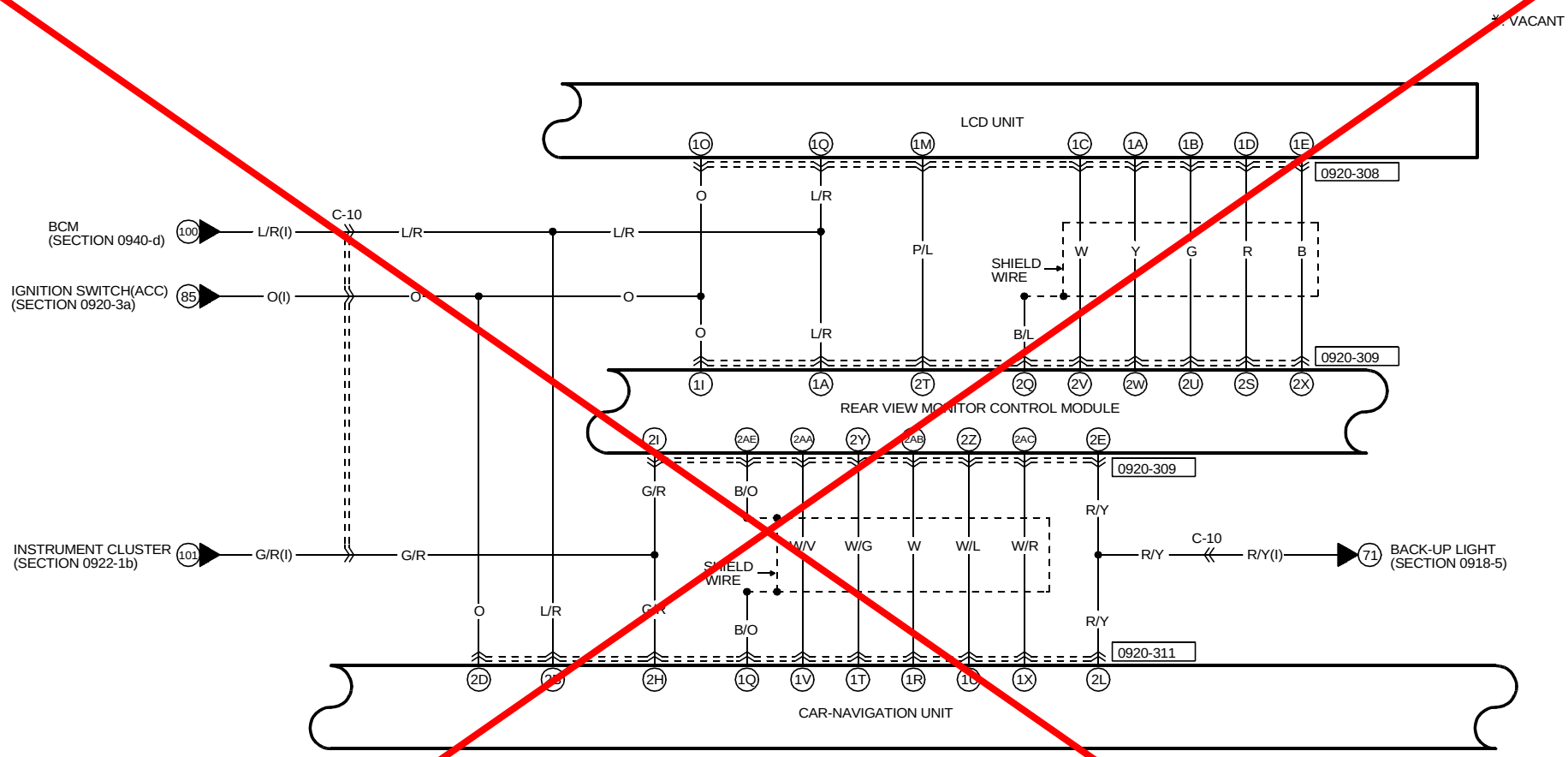

0920-308

LCD UNIT(SHORT CORD)

1W GY/V	1U W/L	1S B/L	1Q L/R	1O O	1M P/L	1K L	1I *	1G B/O	1E B	1C W	1A Y
1X B/P	1V LG/R	1T *	1R BR/W	1P B/Y	1N *	1L *	1J *	1H *	1F *	1D R	1B G

0920-309

REAR VIEW MONITOR CONTROL MODULE(SHORT CORD)

1K G/B	1I O	1C *	1A L/R
1L *	1J *	1H B/Y	1F *	1D *	1B *

2AM B	2AK R/W	2AI *	2AG *	2AE B/O	2AC W/R	2AA W/V	2Y W/G	2W Y	2U G	2S R	2Q B/L	2O R	2M L	2K *	2I G/R	2G B/Y	2E R/Y	2C *	2A *
2AN R/L	2AL B/G	2AJ *	2AH *	2AF *	2AD *	2AB W	2Z W/L	2X B	2V W	2T P/L	2R *	2P *	2N *	2L *	2J *	2H G/W	2F R/B	2D *	2B *

0920-311

CAR-NAVIGATION UNIT(SHORT CORD)

1W *	1U W/L	1S *	1Q B/O	1O B/O	1M *	1K *	1I *	1G *	1E *	1C *	1A *
1X W/R	1V W/V	1T W/G	1R W	1P L	1N P	1L *	1J *	1H *	1F *	1D *	1B *

2O P/L	2M W	2K *	2I *	2G *	2E *	2C *	2A B/Y
2P GY/L	2N R	2L R/Y	2J *	2H G/R	2F *	2D O	2B L/R

cardiagn.com

HARNESS SYMBOL : (F) (E) (R)

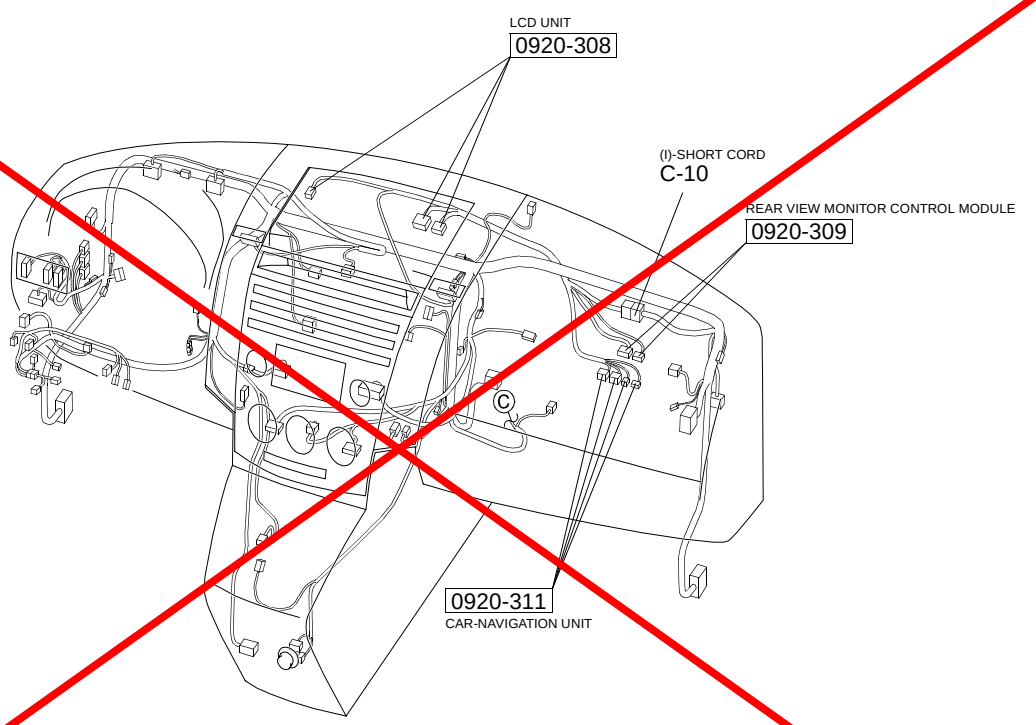

187
cardiagn.com

AUDIO SYSTEM (WITH CAR-NAVIGATION SYSTEM)

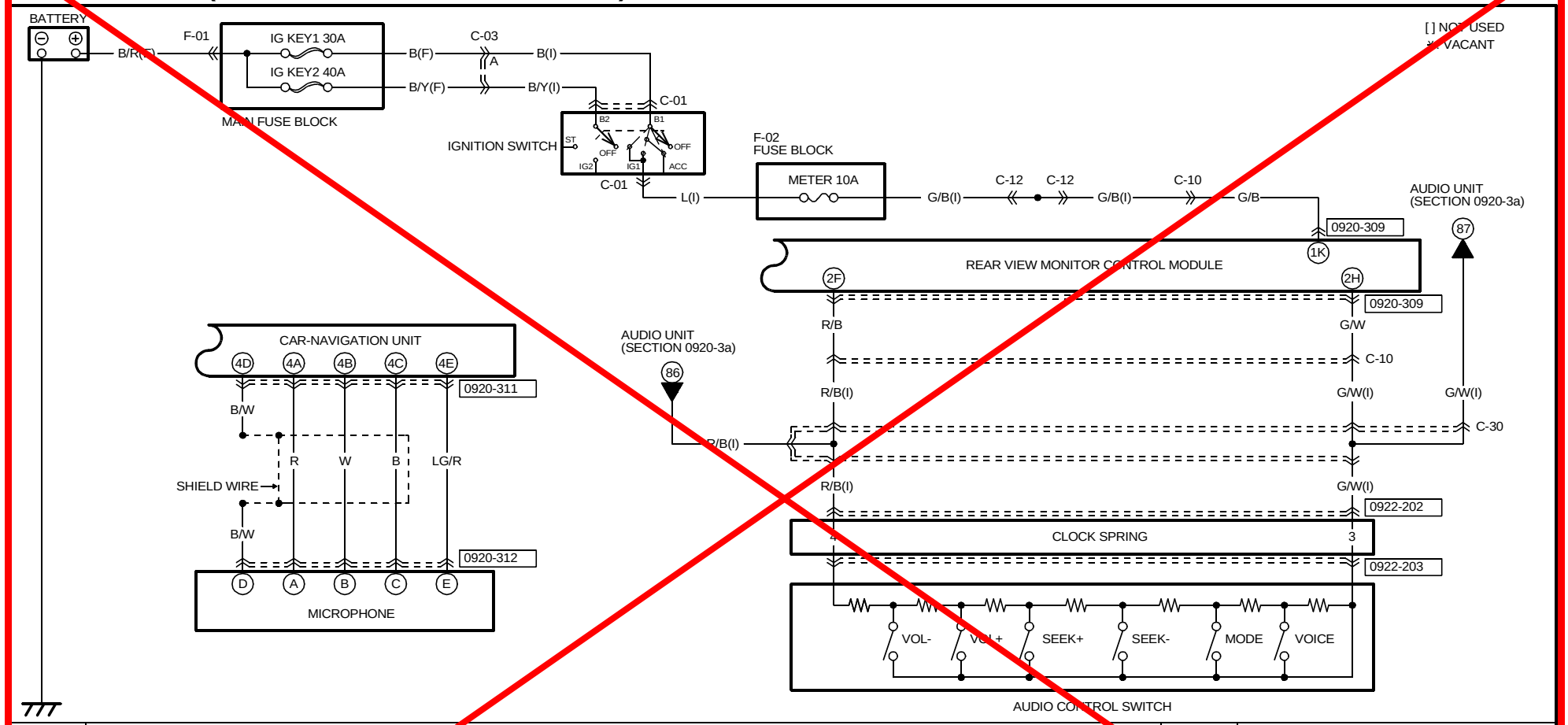

0920-309
REAR VIEW MONITOR CONTROL MODULE(SHORT CORD)

1K G/B	1I O		1C *	1A L/R	
1L *	1J *	1H B/Y	1F *	1D *	1B *

2AM B	2AK R/W	2AI *	2AG *	2AE B/O	2AC W/R	2AA W/V	2Y W/G	2W Y	2U G	2S R	2Q B/L	2O R	2M L	2K *	2I G/R	2G B/Y	2E R/Y	2C *	2A *		
2AN R/L	2AL B/G	2AJ *	2AH *	2AF *	2AD *	2AB W	2Z W/L	2X B	2V W	2T P/L	2R *	2P *	2N *	2L *	2J *	2H G/W	2F R/B	2D *	2B *		

0920-311
CAR-NAVIGATION UNIT(SHORT CORD)

4F *	4E LG/R	4D B/W	4C B	4B W	4A R

0920-312
MICROPHONE(SHORT CORD)

F *	E LG/R	D B/W	C B	B W	A R

0922-202
INSTRUMENT PANEL(I)-CLOCK SPRING

(I)

* [R/W]	* [R/L]	R/B	G/W	B/P	LG/R
Y/R	Y/B	*	*	B	V/W

(CLOCK SPRING)

1	2	3	4	*	*
7	8	*	*	11	12

TERMINALS OF THIS CONNECTOR ARE INDICATED BY NUMBERS.

0922-203
AUDIO CONTROL SWITCH(CLOCK SPRING)

*	*	4	3	2	1	8	7

TERMINALS OF THIS CONNECTOR ARE INDICATED BY NUMBERS.

cardiagn.com

HARNESS SYMBOL : (F) (E) (R)

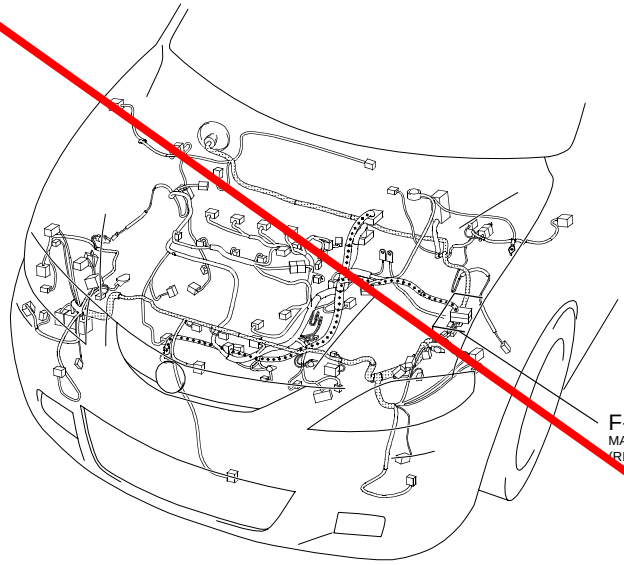

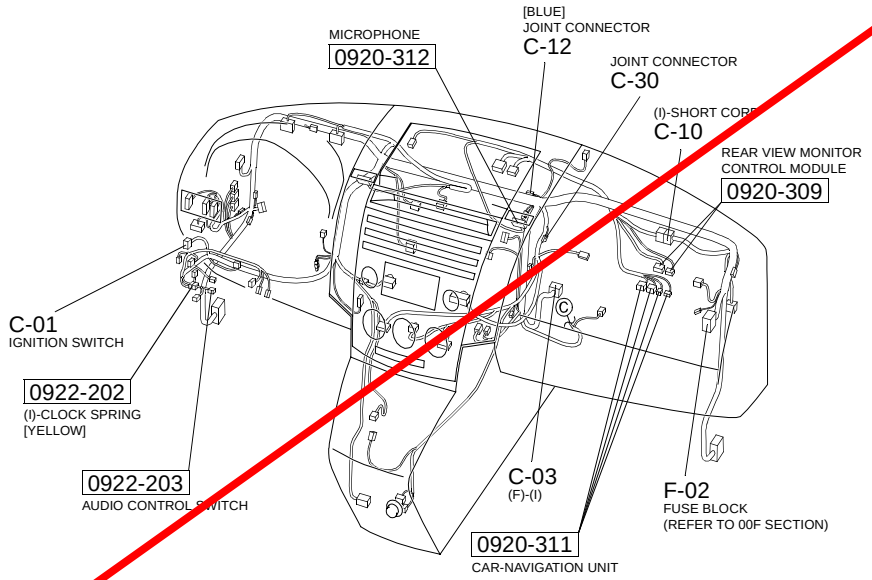

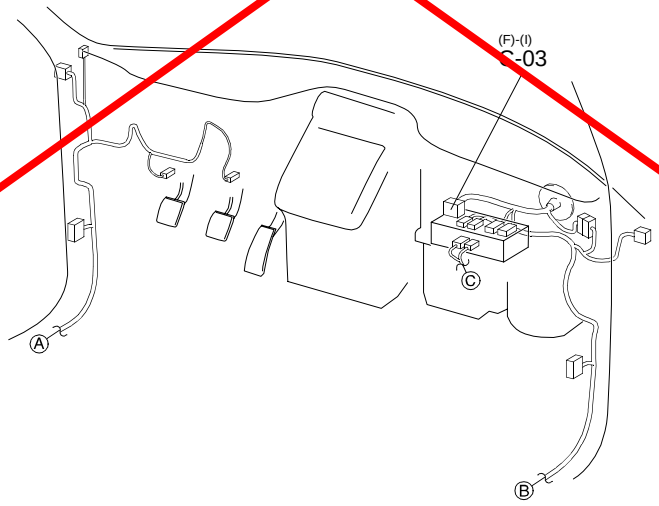

cardiagn.com

REAR ENTERTAINMENT SYSTEM (RES)

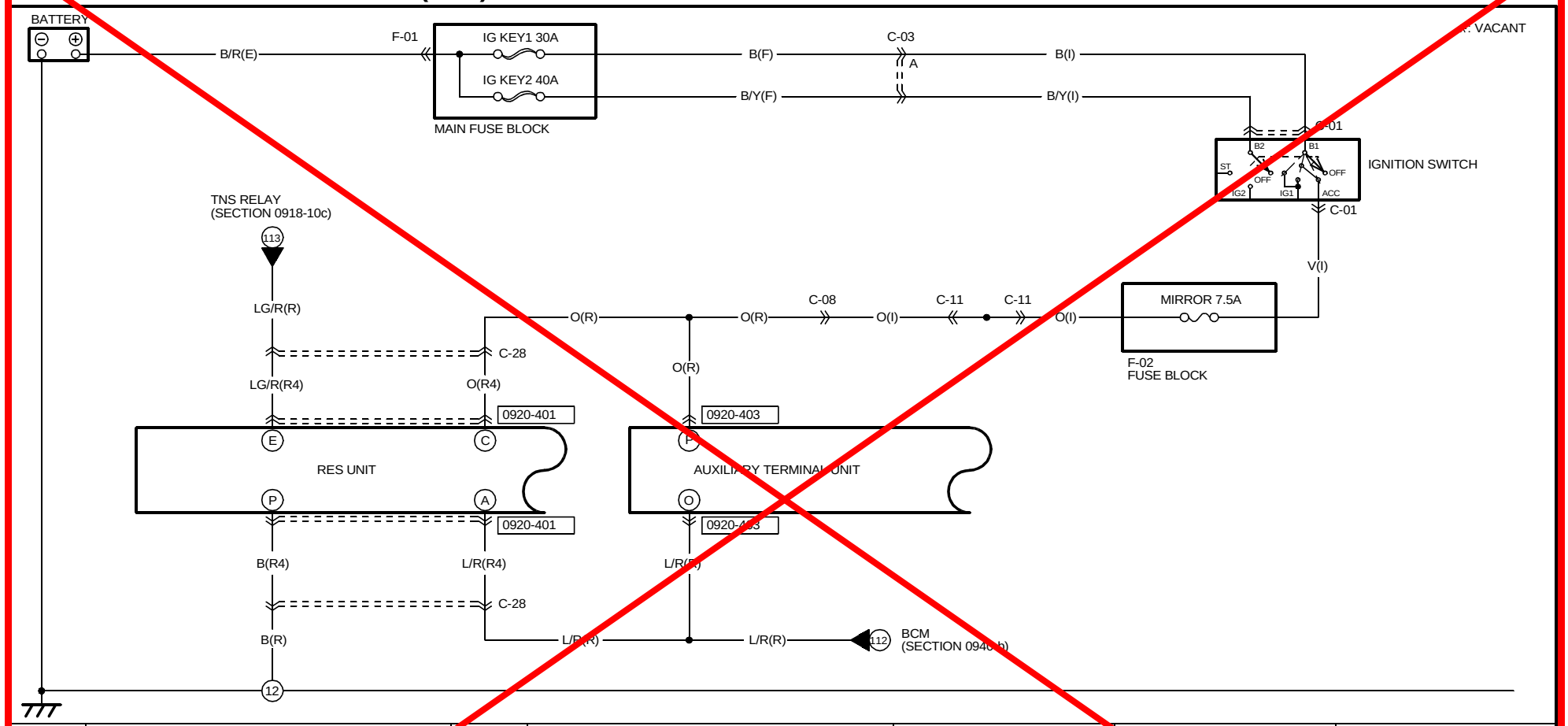

0920-401
RES UNIT(R4)

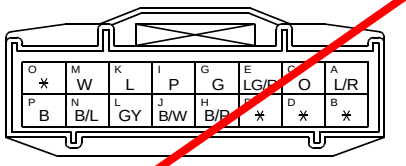

0920-403
AUXILIARY TERMINAL UNIT(R)

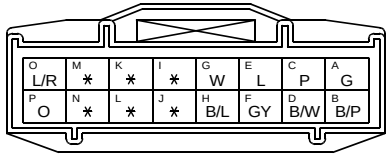

cardiagn.com

HARNESS SYMBOL : (F) (E) (R)

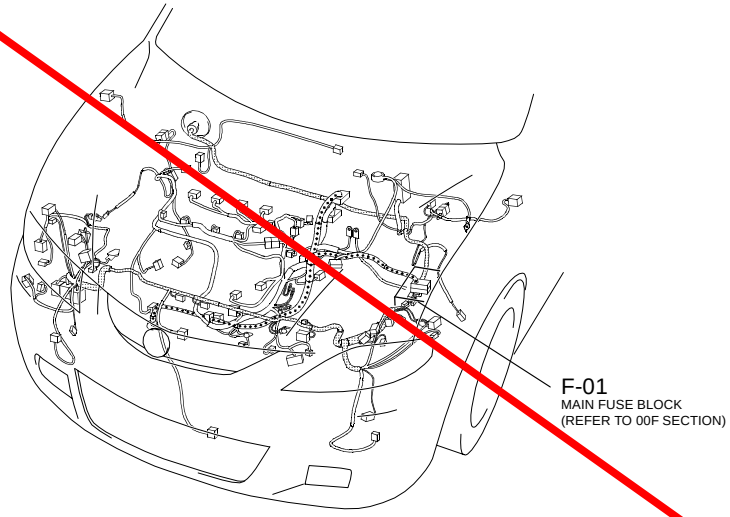

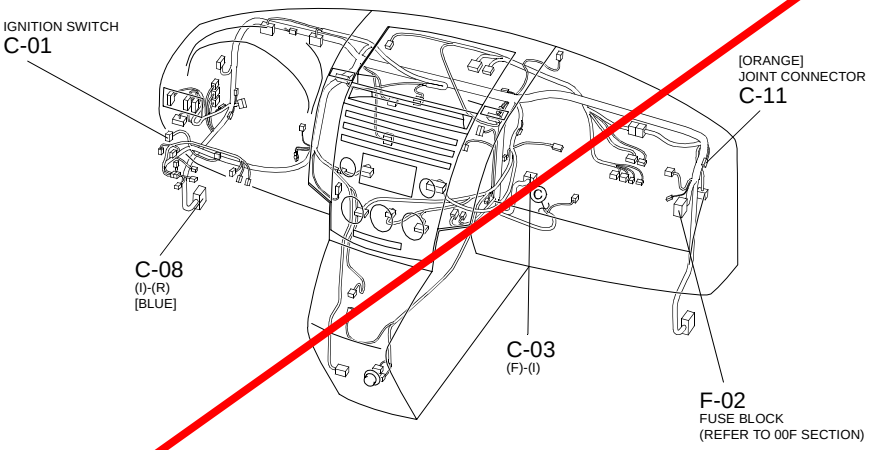

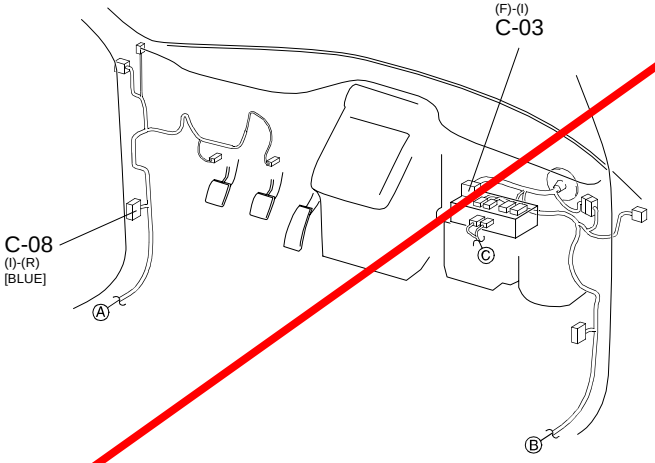

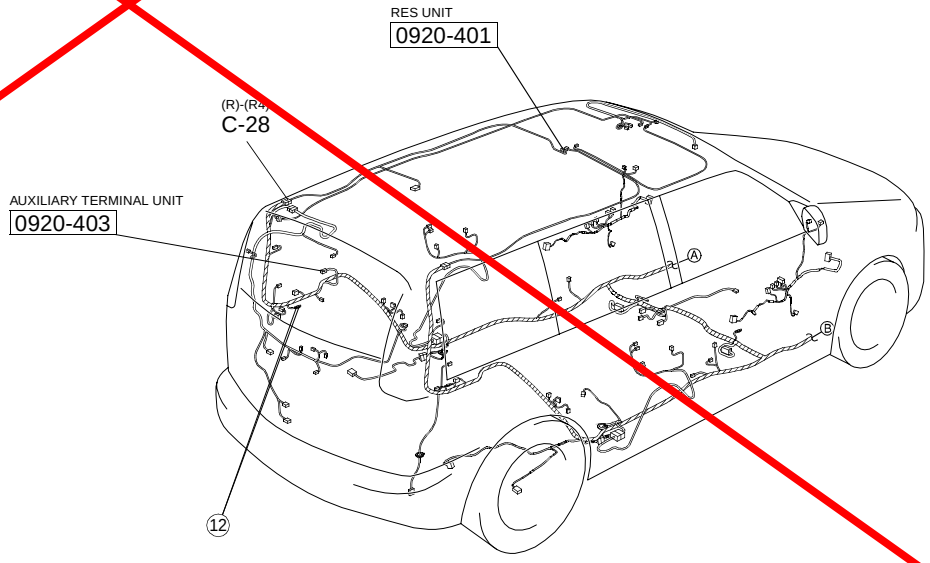

191
cardiagn.com

REAR ENTERTAINMENT SYSTEM (RES)

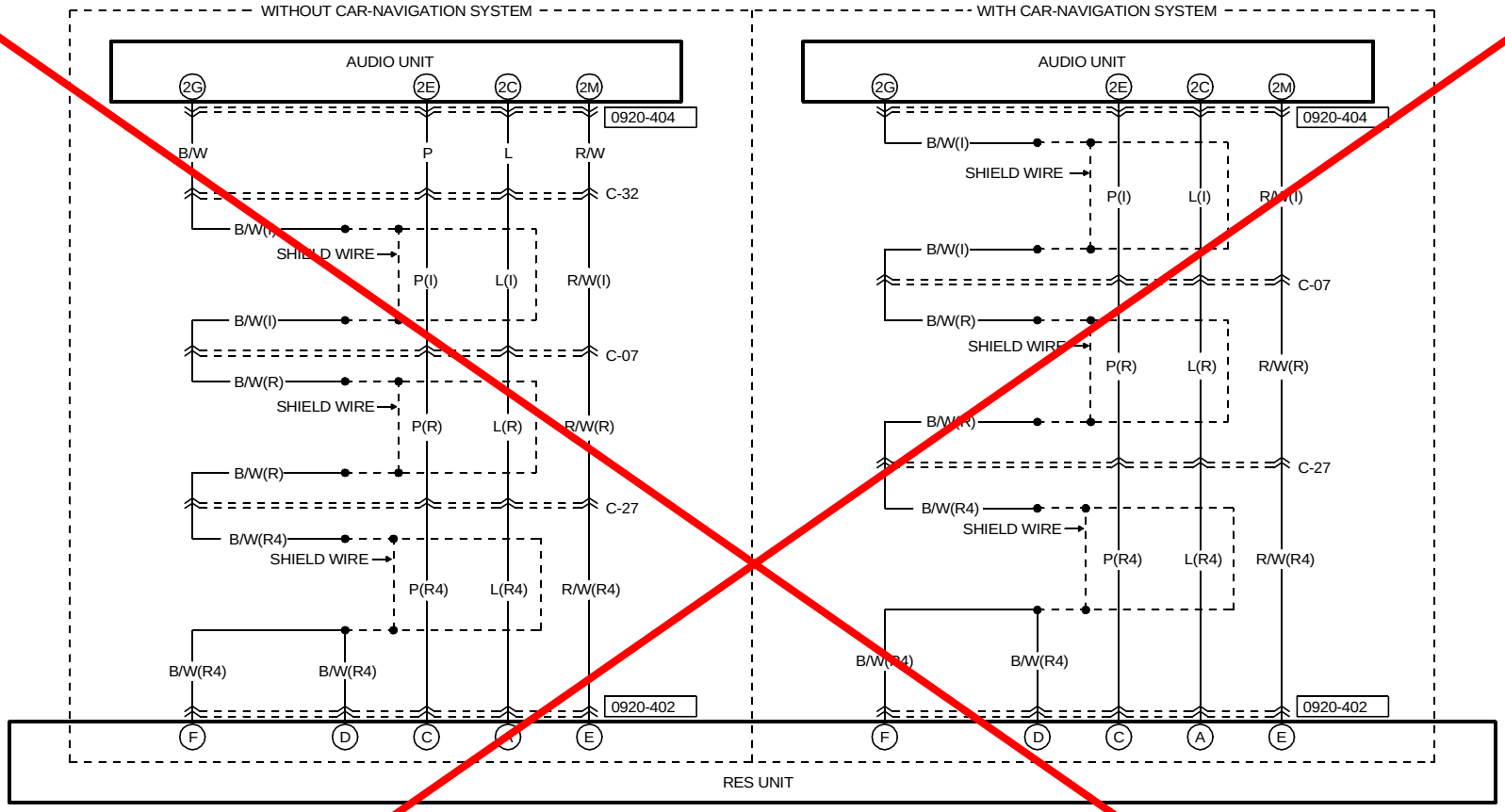

0920-402
RES UNIT(R4)

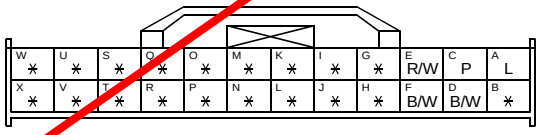

0920-404
AUDIO UNIT
(I) ← WITH CAR-NAVIGATION SYSTEM
(SHORT CORD) ← WITHOUT CAR-NAVIGATION SYSTEM

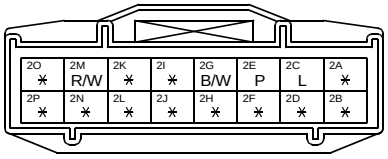

cardiagn.com

HARNESS SYMBOL : (F) (E) (R)

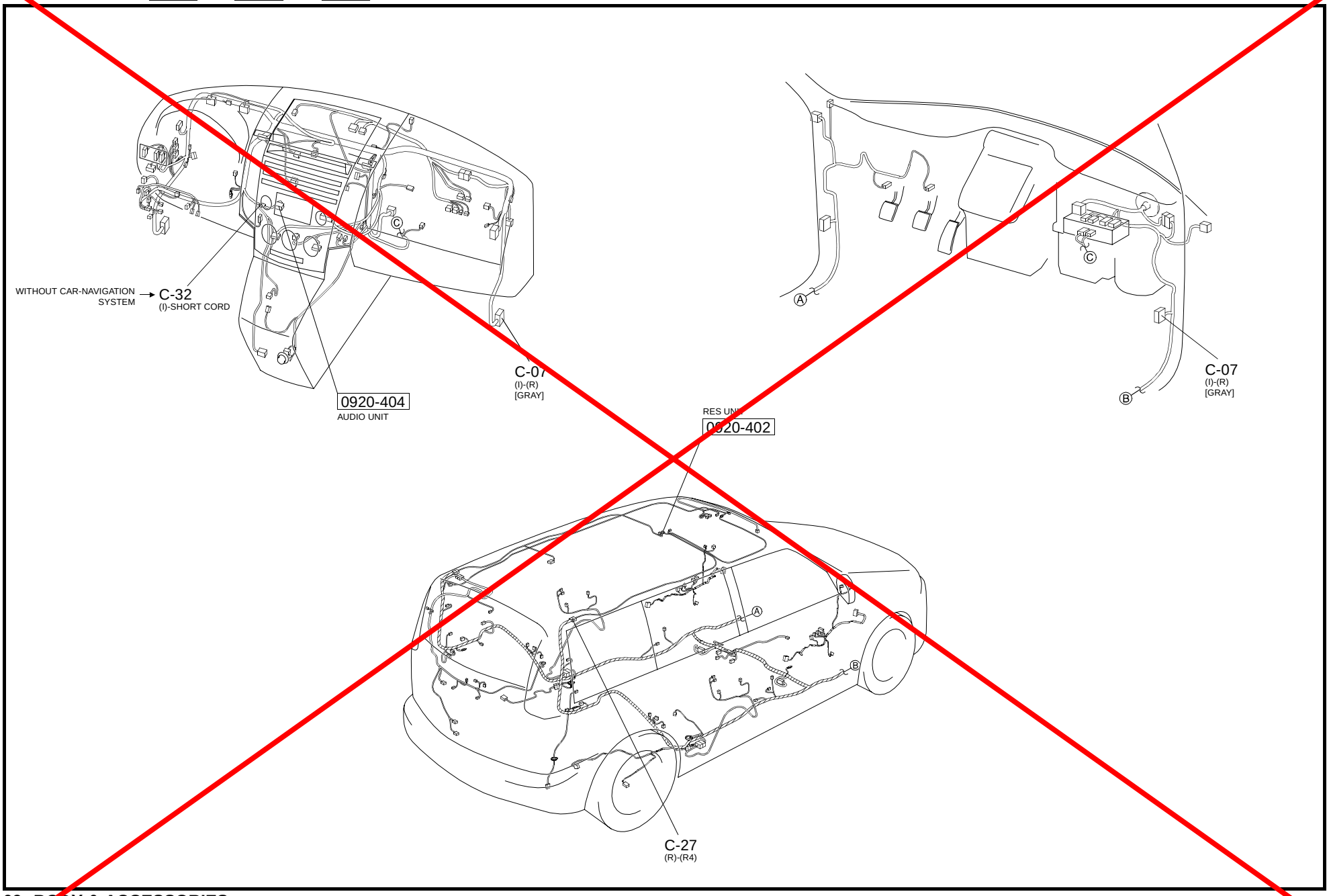

cardiagn.com

REAR ENTERTAINMENT SYSTEM (RES)

*: VACANT

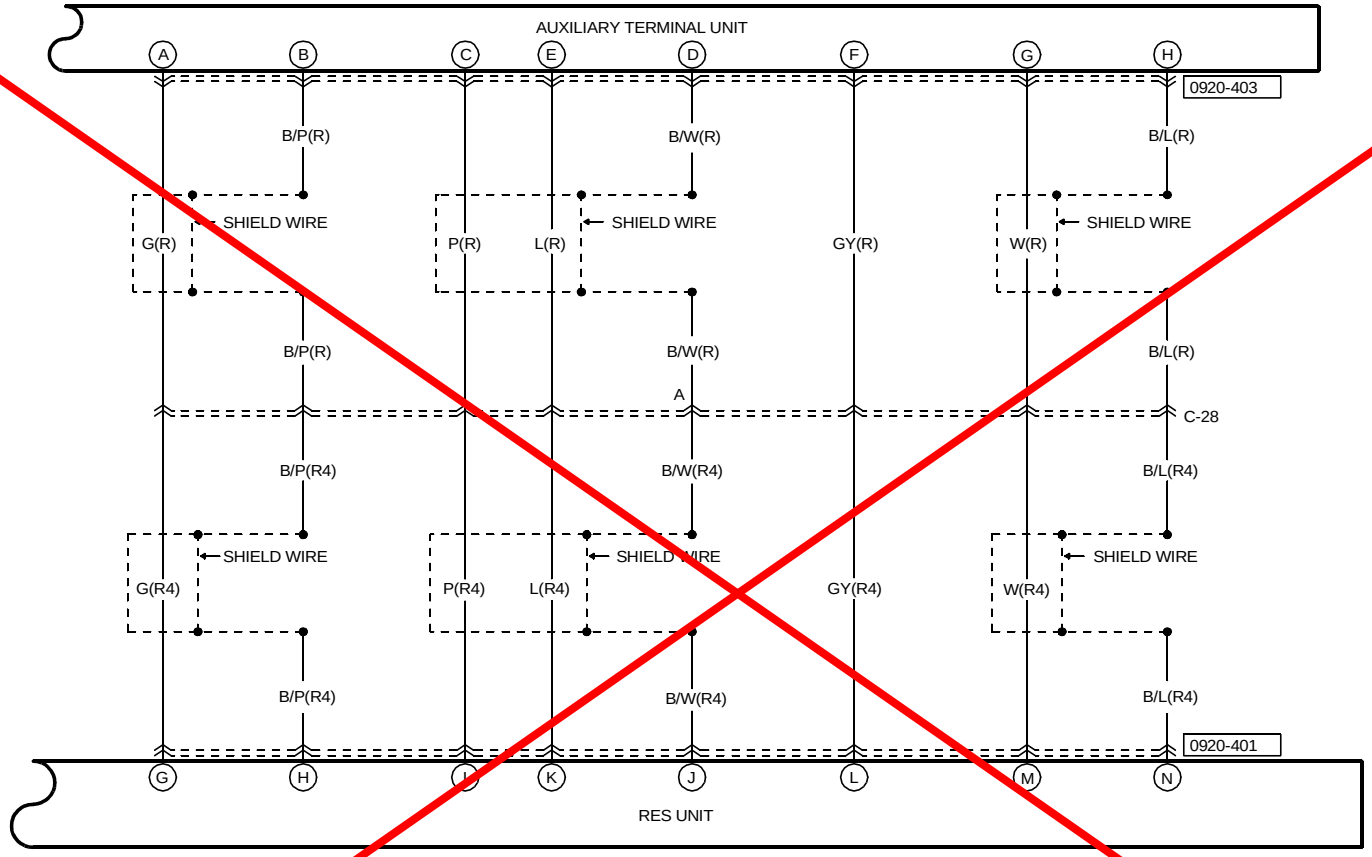

0920-401
RES UNIT(R4)

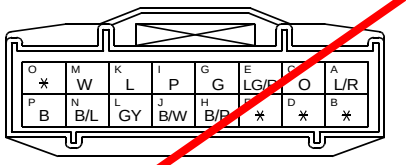

0920-403
AUXILIARY TERMINAL UNIT(R)

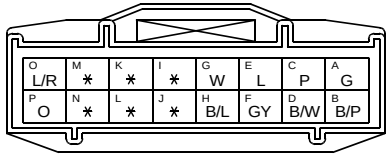

cardiagn.com

HARNESS SYMBOL : (F) (E) (R)

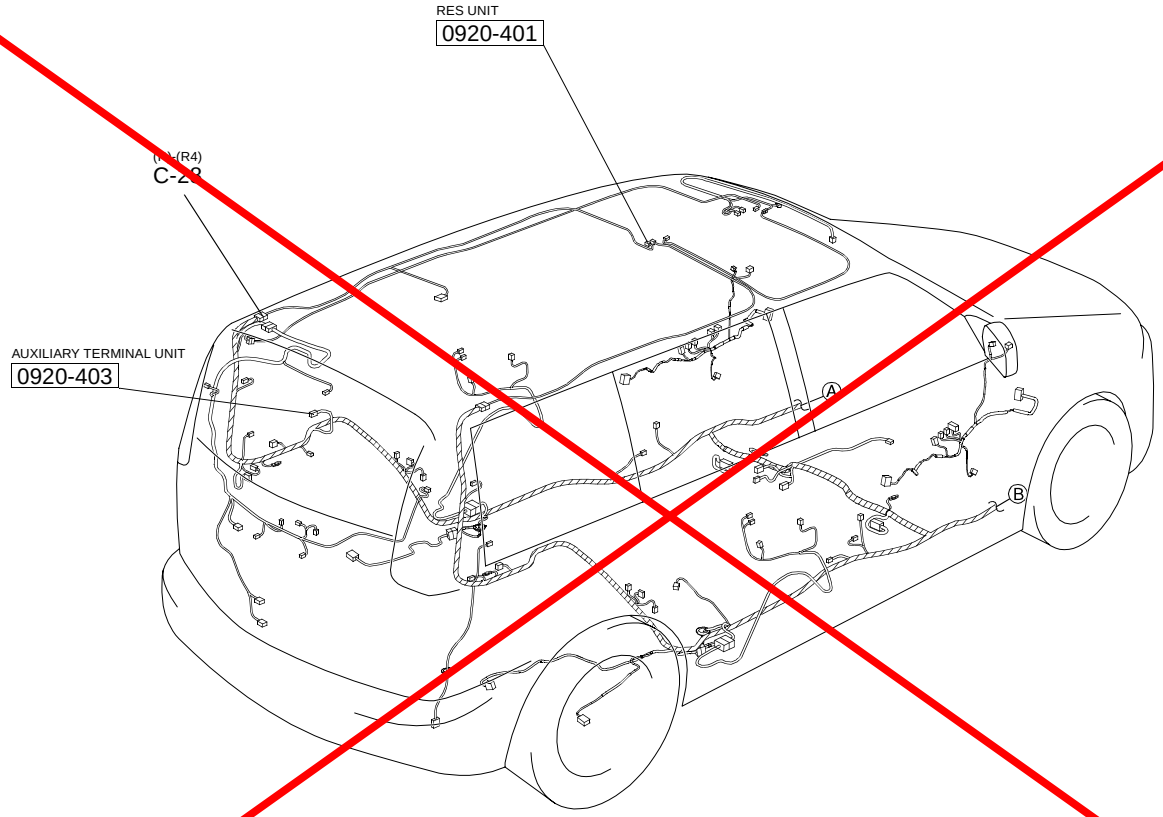

cardiagn.com

INSTRUMENT CLUSTER

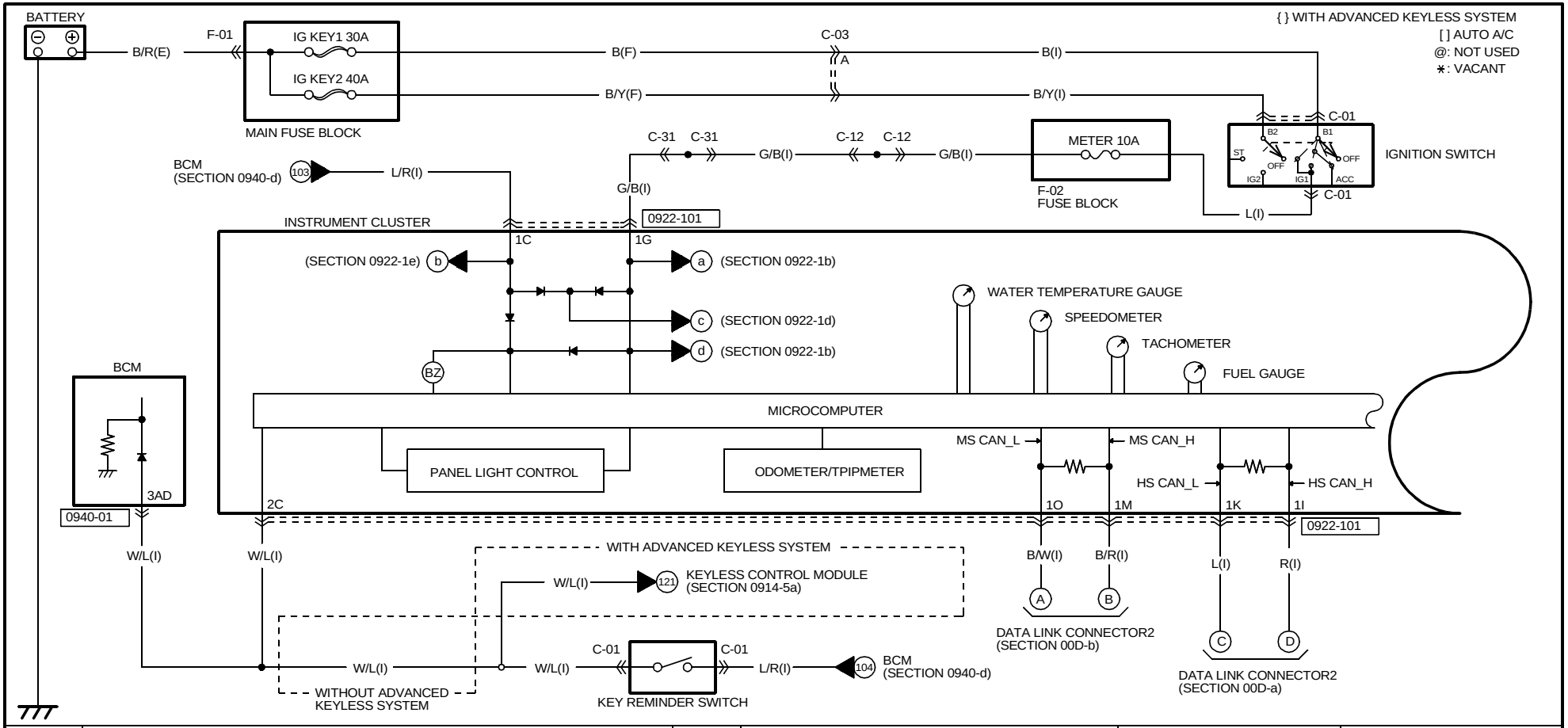

0922-101
INSTRUMENT CLUSTER(I)

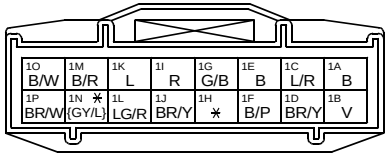

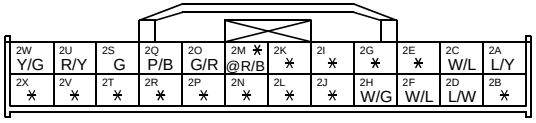

0940-01
BCM

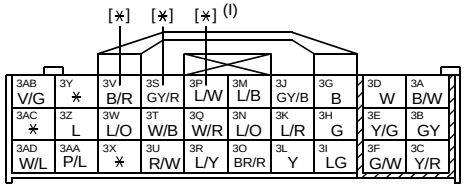

cardiagn.com

HARNESS SYMBOL : (F) (E) (R)

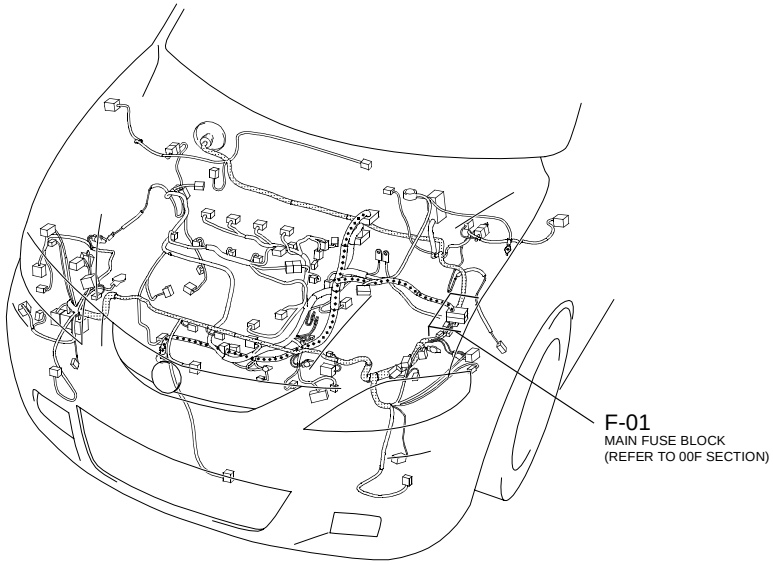

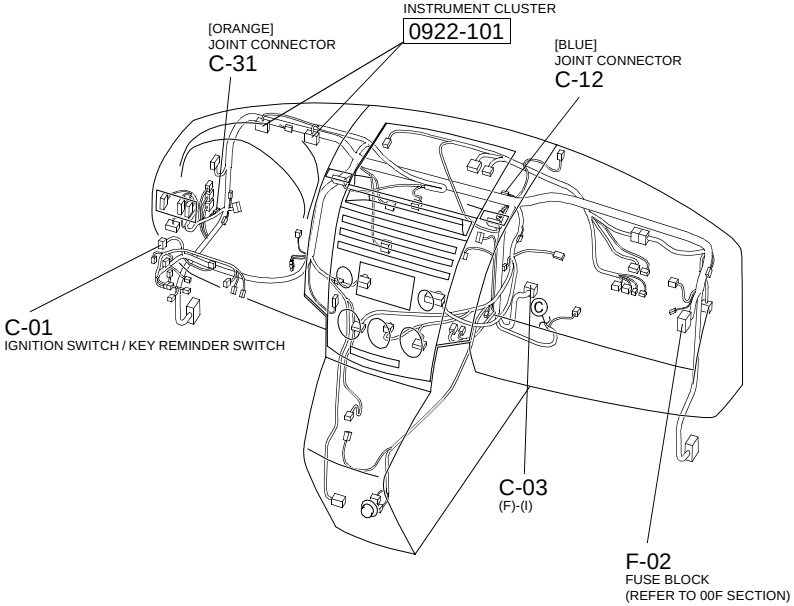

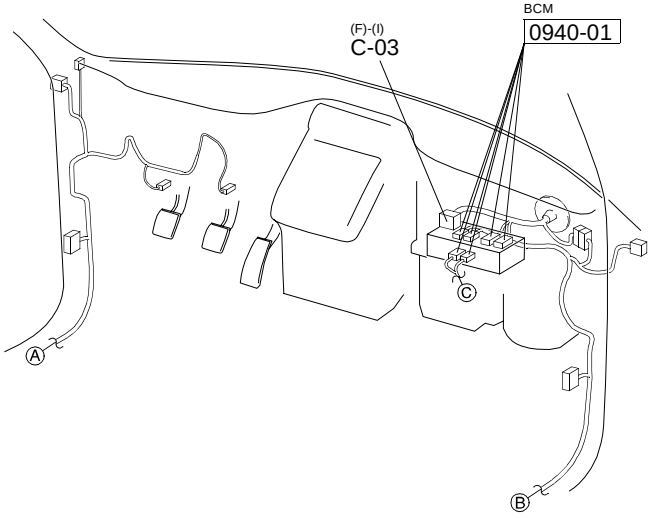

cardiagn.com

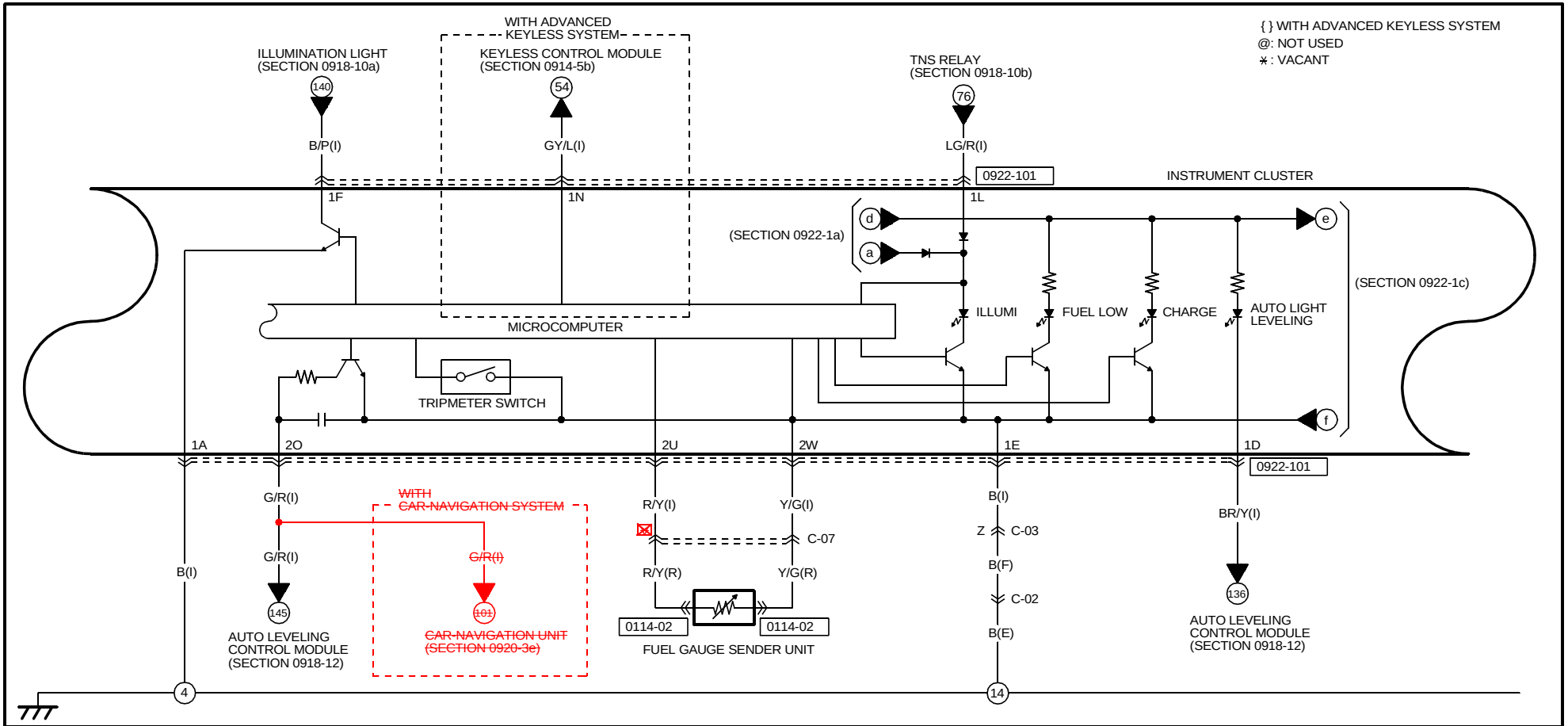

0922-101

INSTRUMENT CLUSTER(I)

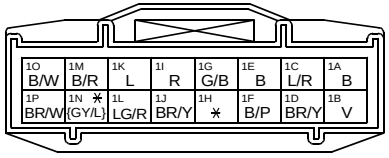

1O B/W	1M B/R	1K L	1I R	1G G/B	1E B	1C L/R	1A B
1P BR/W	1N * {GY/L}	1L LG/R	1J BR/Y	1H *	1F B/P	1D BR/Y	1B V

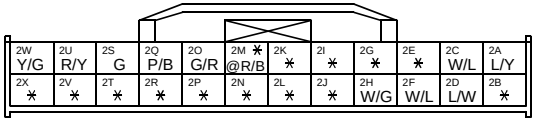

2W Y/G	2U R/Y	2S G	2Q P/B	2O G/R	2M * @R/B	2K *	2I *	2G *	2E *	2C W/L	2A L/Y
2X *	2V *	2T *	2R *	2P *	2N *	2L *	2J *	2H W/G	2F W/L	2D L/W	2B *

0114-02

FUEL GAUGE SENDER UNIT(R)

Y/G	R/Y
B	G/R

cardiagn.com

HARNESS SYMBOL : (F) (E) (R)

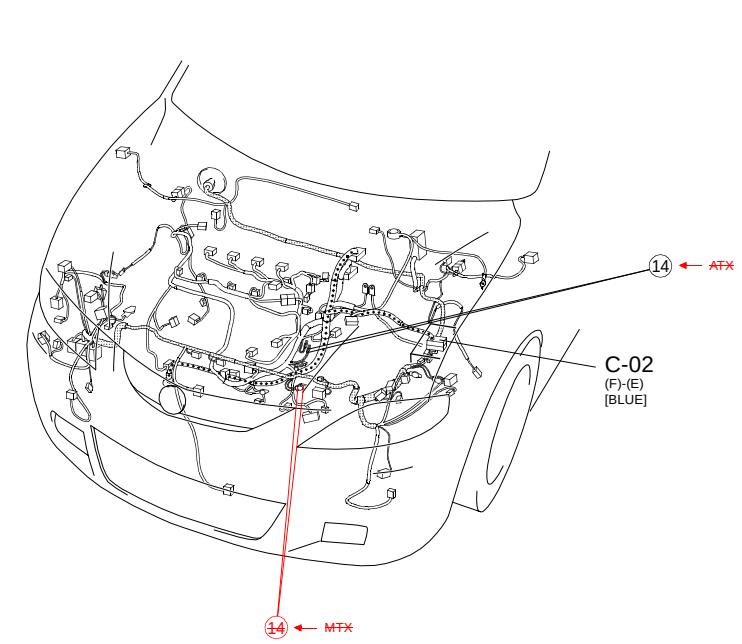

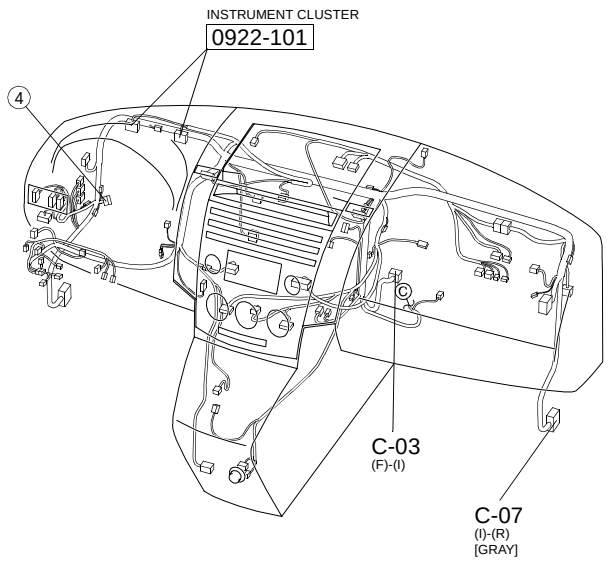

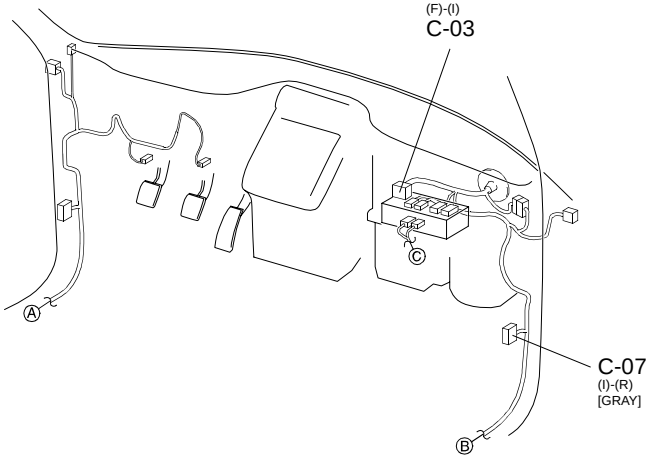

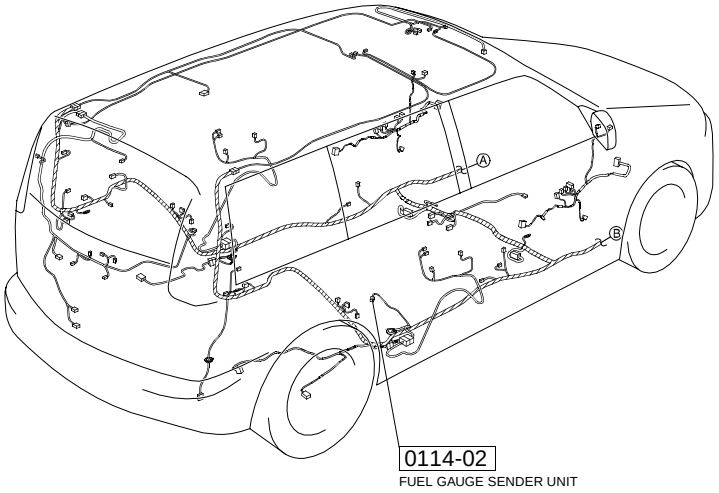

cardiagn.com

0922-1c

{ } WITH ADVANCED KEYLESS SYSTEM
*: VACANT

INSTRUMENT CLUSTER

(SECTION 0922-1b) e
(SECTION 0922-1b) f
g
h
(SECTION 0922-1d)

MIL
SEAT BELTS
HI-BEAM
~~DSC~~
~~DSC OFF~~
AIR BAG
OIL

TO MICROCOMPUTER

1J
1B
0922-101
V(I)
BR/Y(I)
C-03
V(F)
C-02
V(E)
0922-102
38
SAS CONTROL MODULE
(SECTION 0810-1b)
OIL PRESSURE SWITCH

0922-101
INSTRUMENT CLUSTER(I)

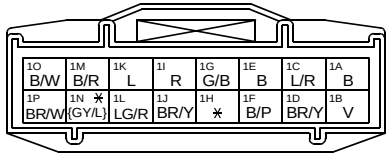

0922-102
OIL PRESSURE SWITCH(E)

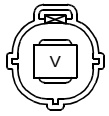

cardiagn.com

HARNESS SYMBOL : (F) (E) (R)

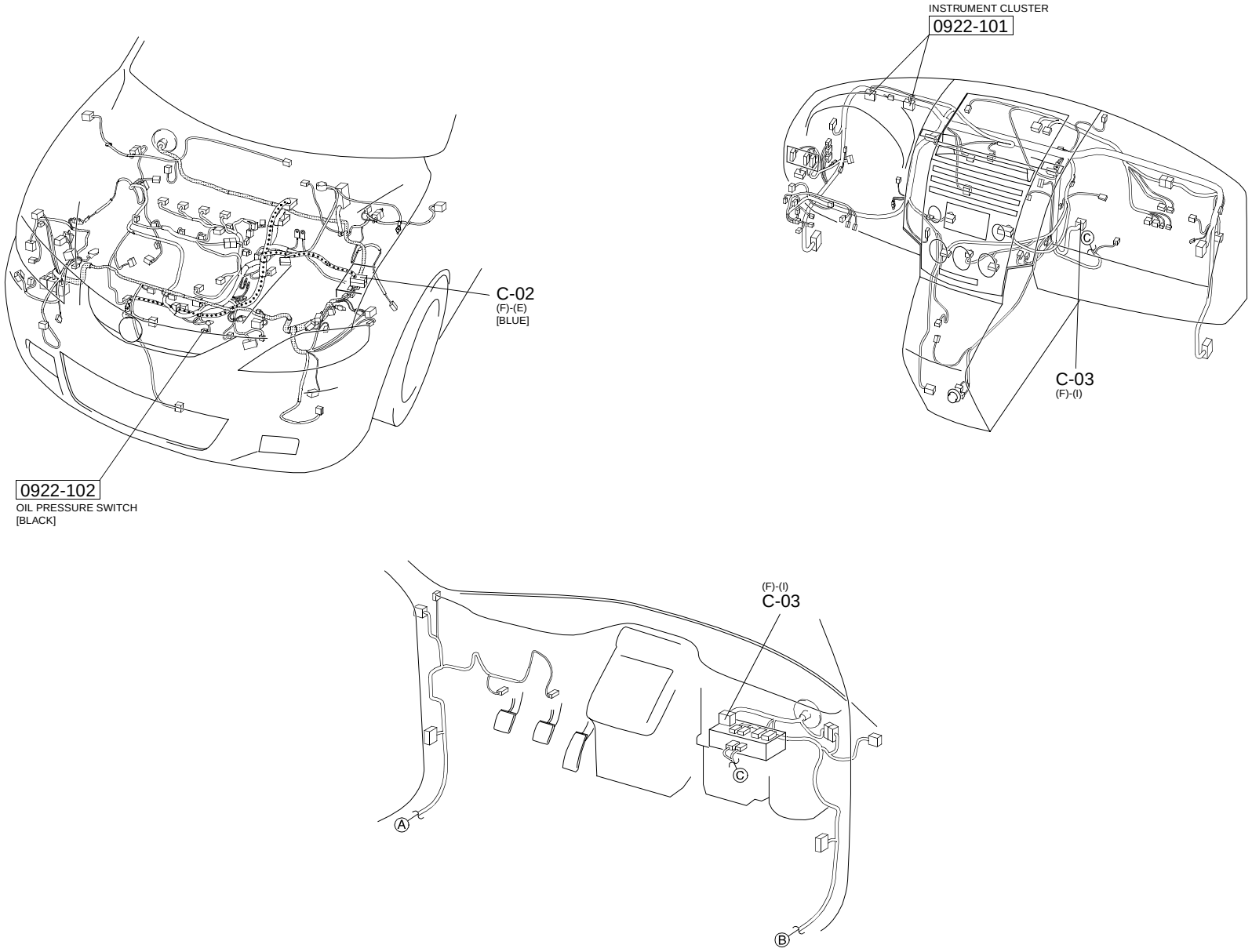

cardiagn.com

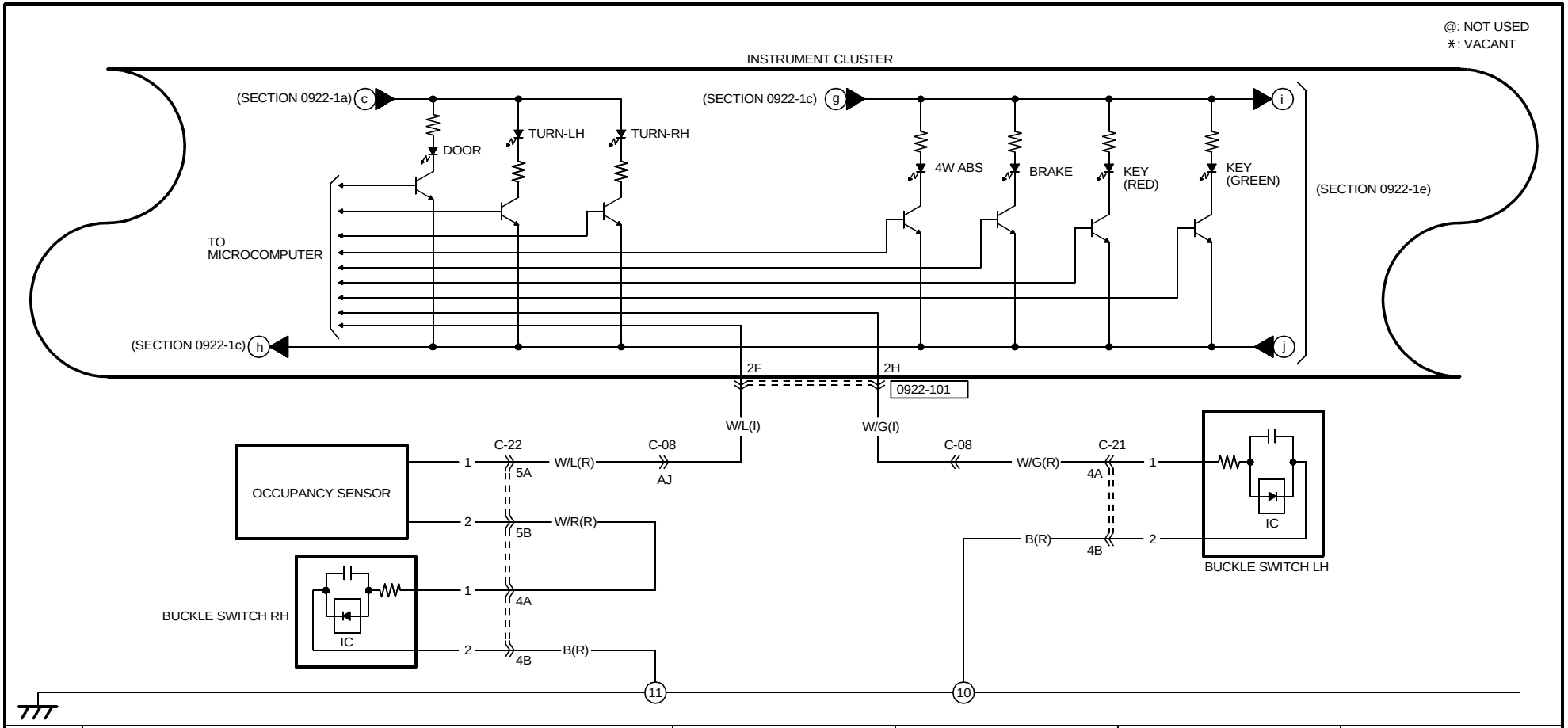

0922-101

INSTRUMENT CLUSTER(I)

2W Y/G	2U R/Y	2S G	2Q P/B	2O G/R	2M * @R/B	2K *	2I *	2G *	2E *	2C W/L	2A L/Y
2X *	2V *	2T *	2R *	2P *	2N *	2L *	2J *	2H W/G	2F W/L	2D L/W	2B *

cardiagn.com

HARNESS SYMBOL : (F) (E) (R)

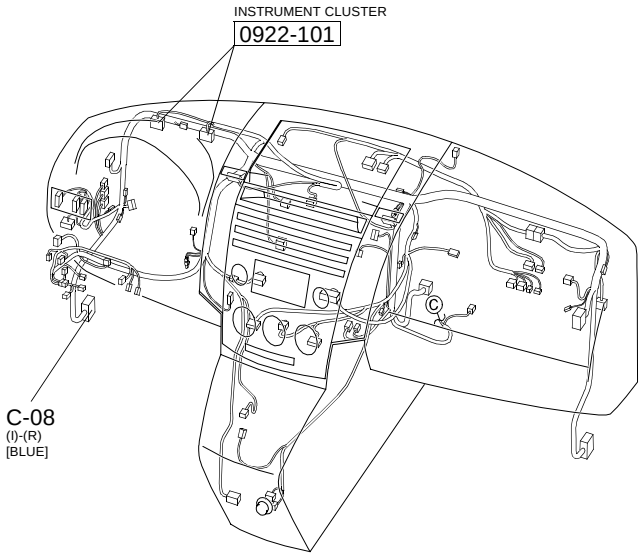

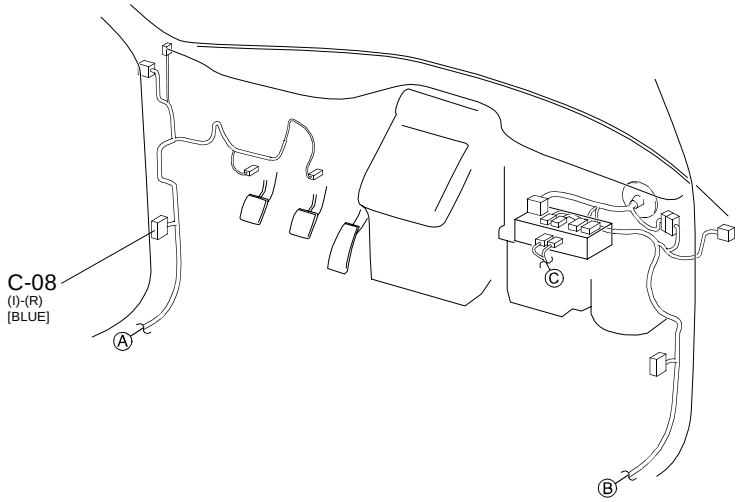

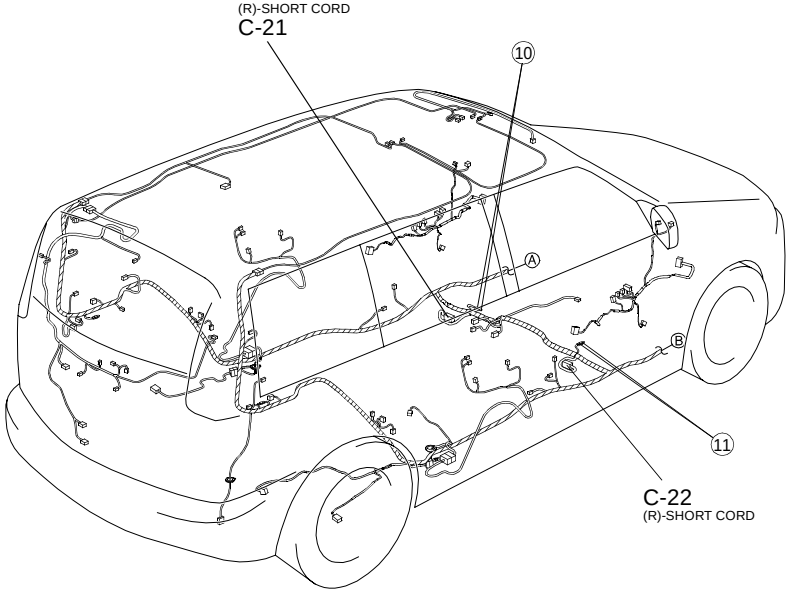

cardiagn.com

@: NOT USED
*: VACANT

REAR FOG LIGHT RELAY (SECTION 0918-4) 132 L/Y(I)

FRONT FOG LIGHT RELAY (SECTION 0918-3) 70 L/W(I)

INSTRUMENT CLUSTER

0922-101 2D 2A

(SECTION 0922-1a) b

(SECTION 0922-1d) i

SECURITY

WASHER

EPS

P R N D M 1-4

F-FOG R-FOG

SELECTOR INDICATOR DRIVE CIRCUIT

TO MICROCOMPUTER

(SECTION 0922-1d) j

2Q 2S 1P

0922-101

P/B(I) G(I) BR/W(I)

47 48

C-03 0922-103 BR/W(F) 0922-103 B(F)

WASHER FLUID-LEVEL SENSOR

B/P(F)

WITHOUT ADVANCED KEYLESS SYSTEM → COIL
WITH ADVANCED KEYLESS SYSTEM → KEYLESS CONTROL MODULE (SECTION 0914-3)

1

0922-101
INSTRUMENT CLUSTER(I)

1O B/W	1M B/R	1K L	1I R	1G G/B	1E B	1C L/R	1A B
1P BR/W	1N * (GY/L)	1L LG/R	1J BR/Y	1H *	1F B/P	1D BR/Y	1B V

2W Y/G	2U R/Y	2S G	2Q P/B	2O G/R	2M * @R/B	2K *	2I *	2G *	2E *	2C W/L	2A L/Y
2X *	2V *	2T *	2R *	2P *	2N *	2L *	2J *	2H W/G	2F W/L	2D L/W	2B *

0922-103
WASHER FLUID-LEVEL SENSOR(F)

B	BR/W

cardiagn.com

HARNESS SYMBOL : (F) (E) (R)

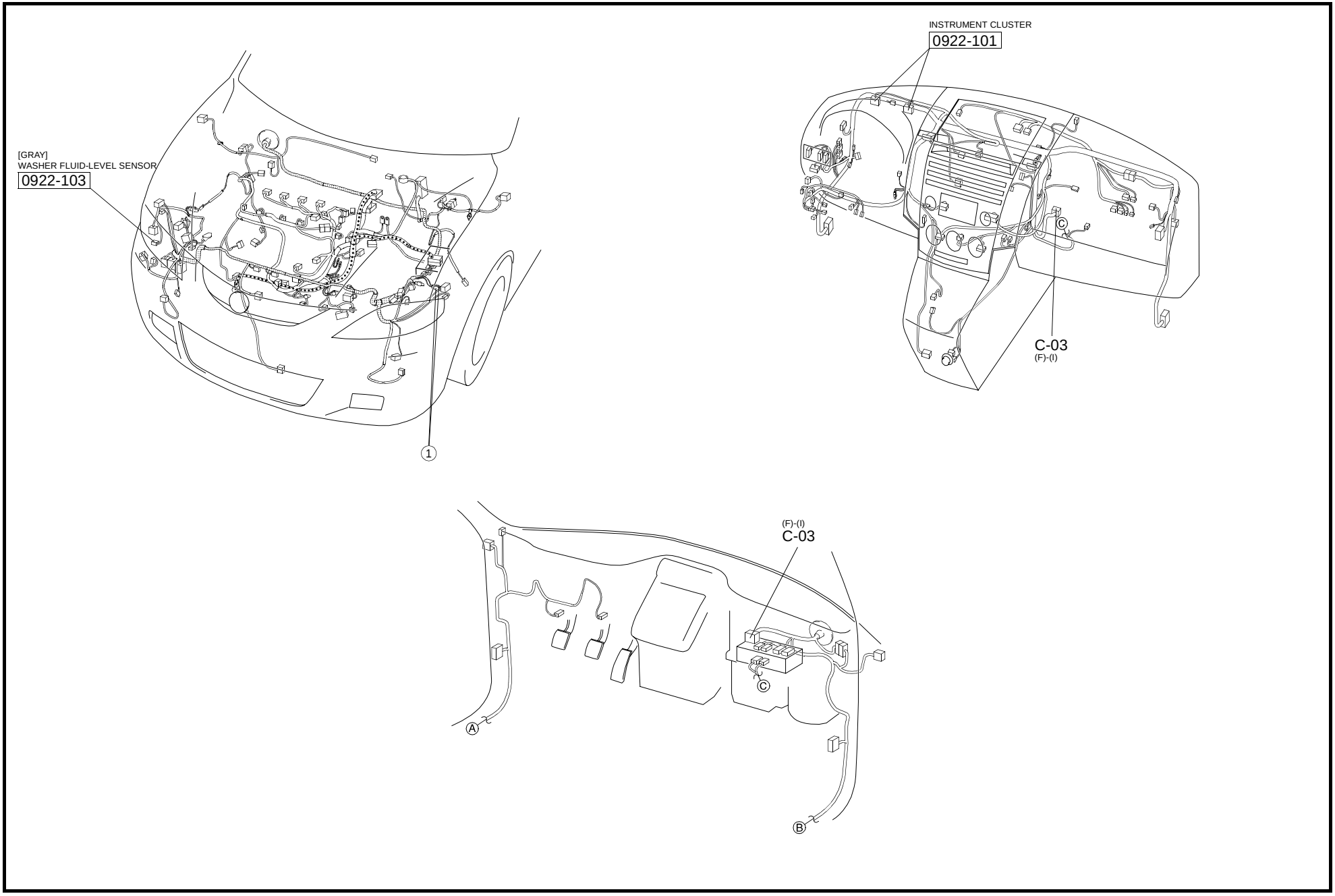

cardiagn.com

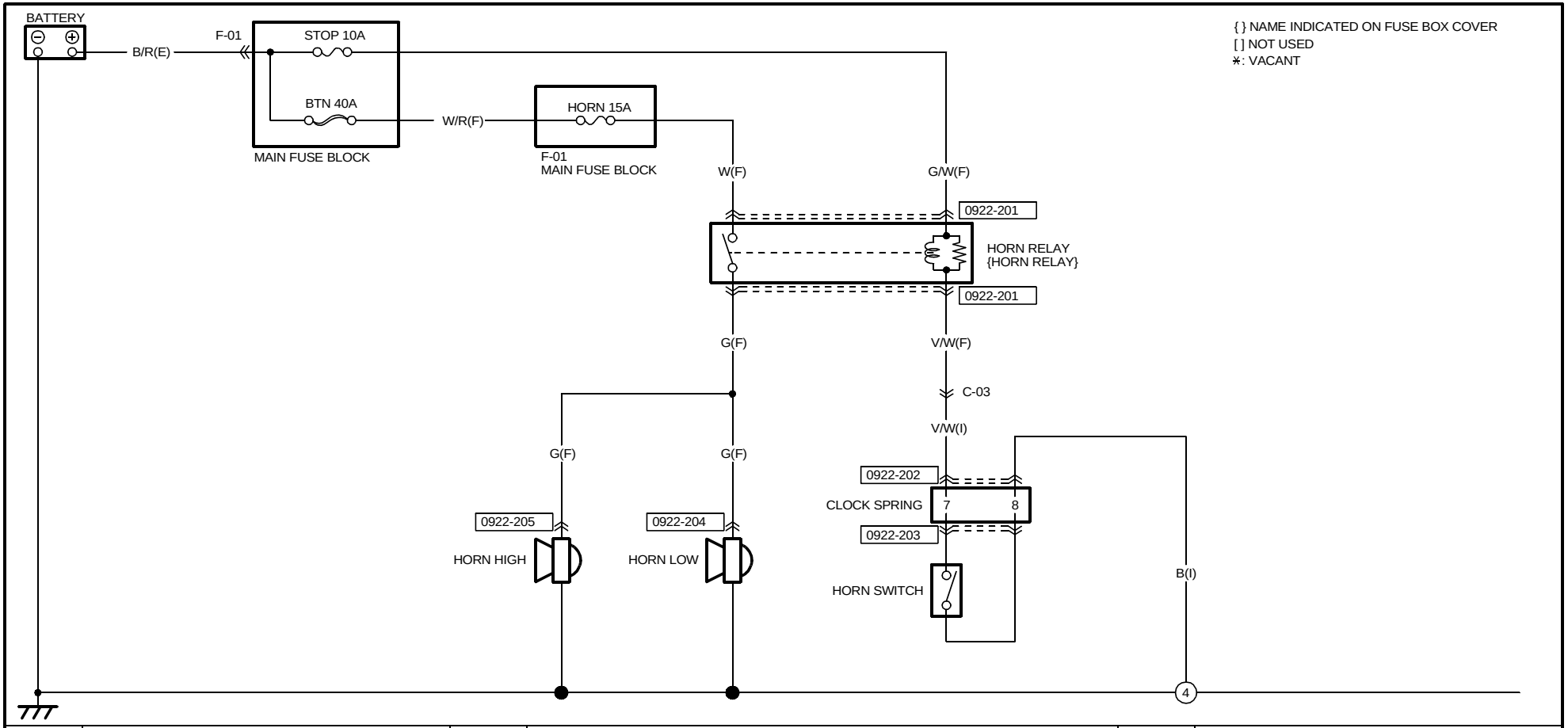

0922-201
HORN RELAY(F)

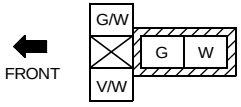

NOTE:SEEN FROM TERMINAL SIDE

0922-202
INSTRUMENT PANEL(I)-CLOCK SPRING

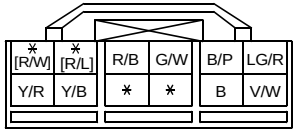

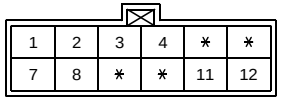

TERMINALS OF THIS CONNECTOR
ARE INDICATED BY NUMBERS.

0922-203
HORN SWITCH(CLOCK SPRING)

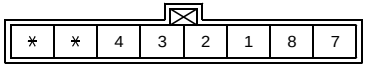

TERMINALS OF THIS CONNECTOR
ARE INDICATED BY NUMBERS.

0922-204
HORN LOW(F)

0922-205
HORN HIGH(F)

cardiagn.com

HARNESS SYMBOL : (F) (E) (R)

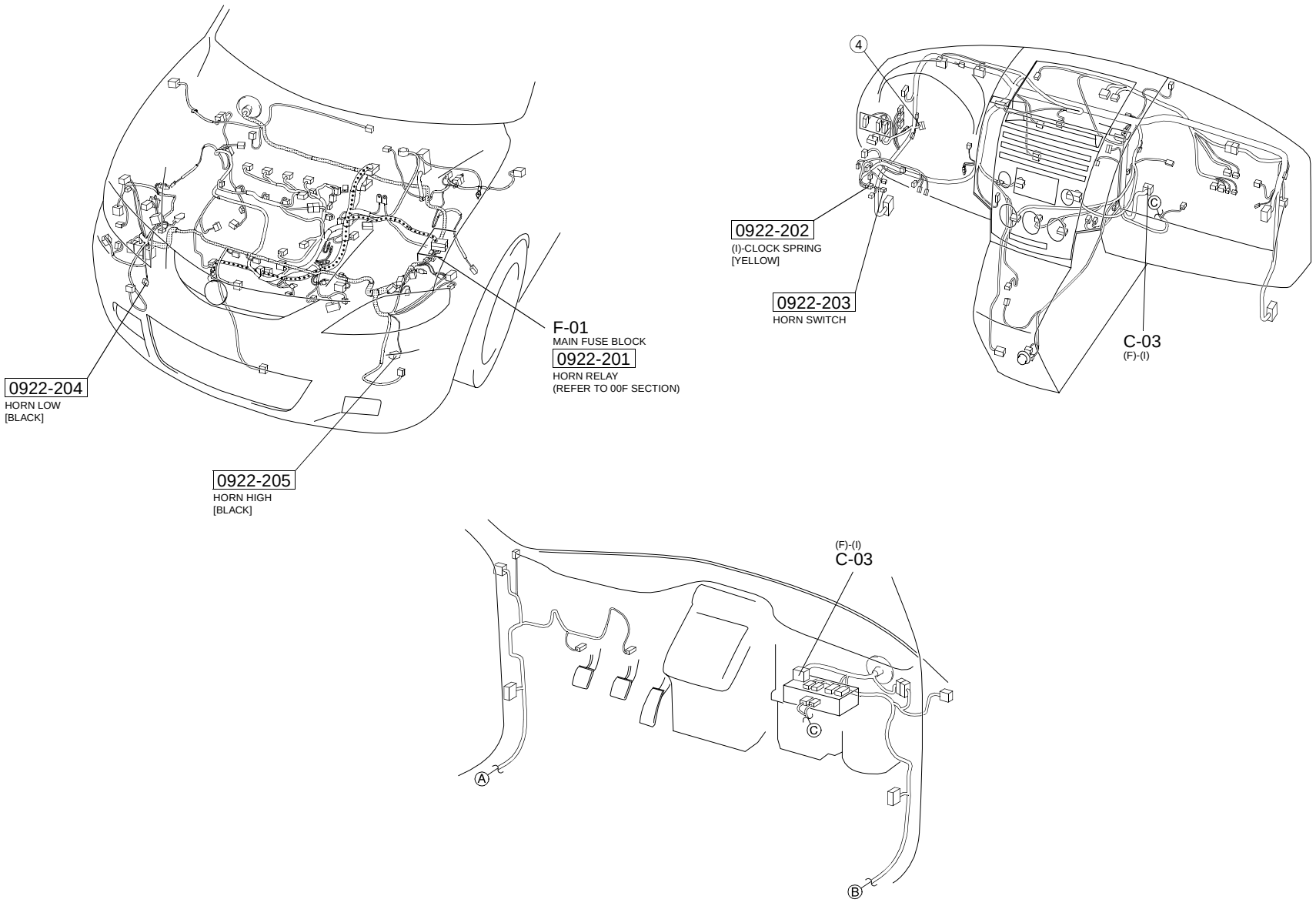

cardiagn.com

INFORMATION DISPLAY

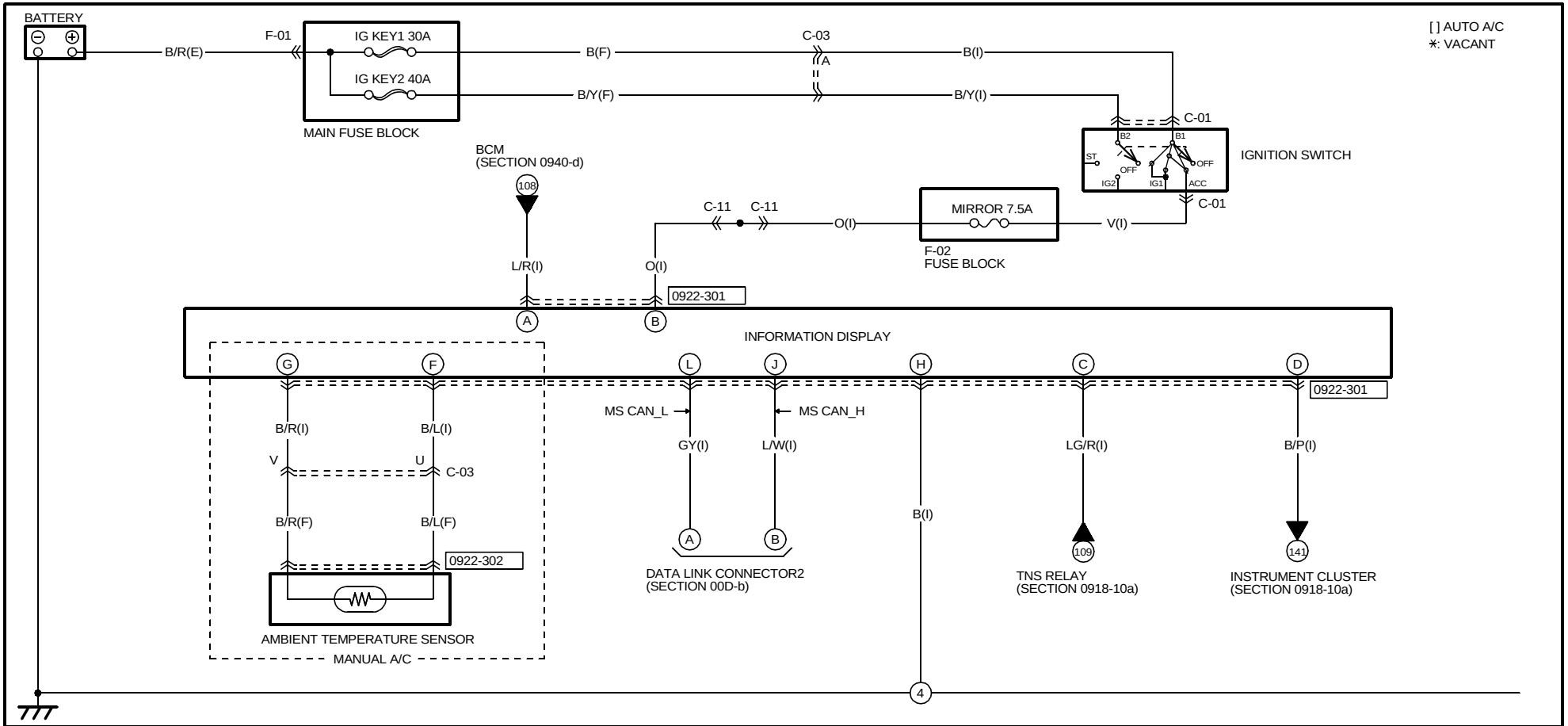

0922-301
INFORMATION DISPLAY(I)

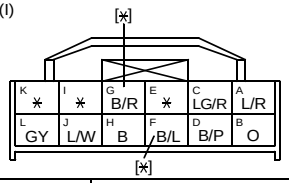

0922-302
AMBIENT TEMPERATURE SENSOR(F)

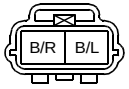

(MANUAL A/C)

cardiagn.com

HARNESS SYMBOL : (F) (E) (R)

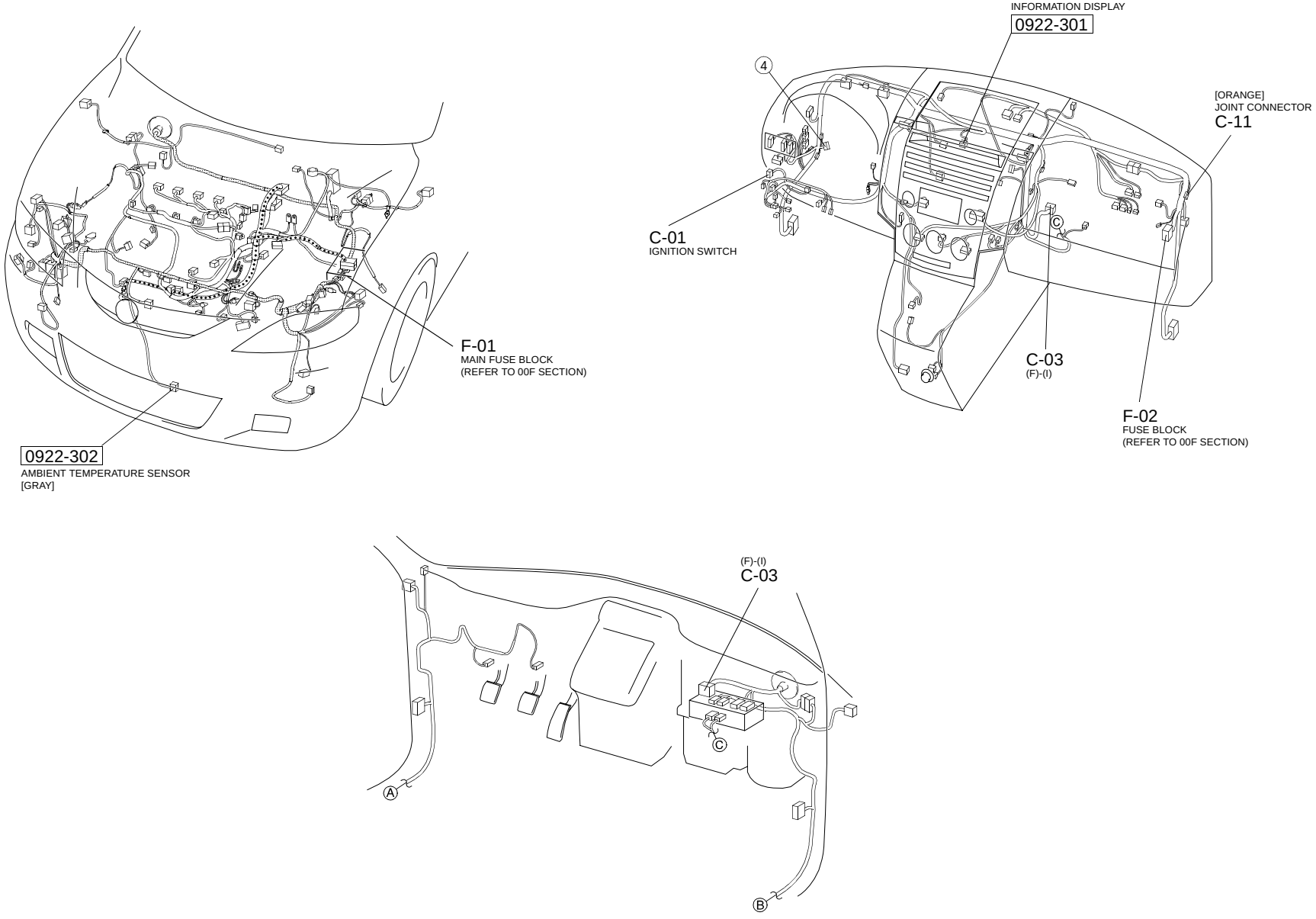

cardiagn.com

BCM (BODY CONTROL MODULE)

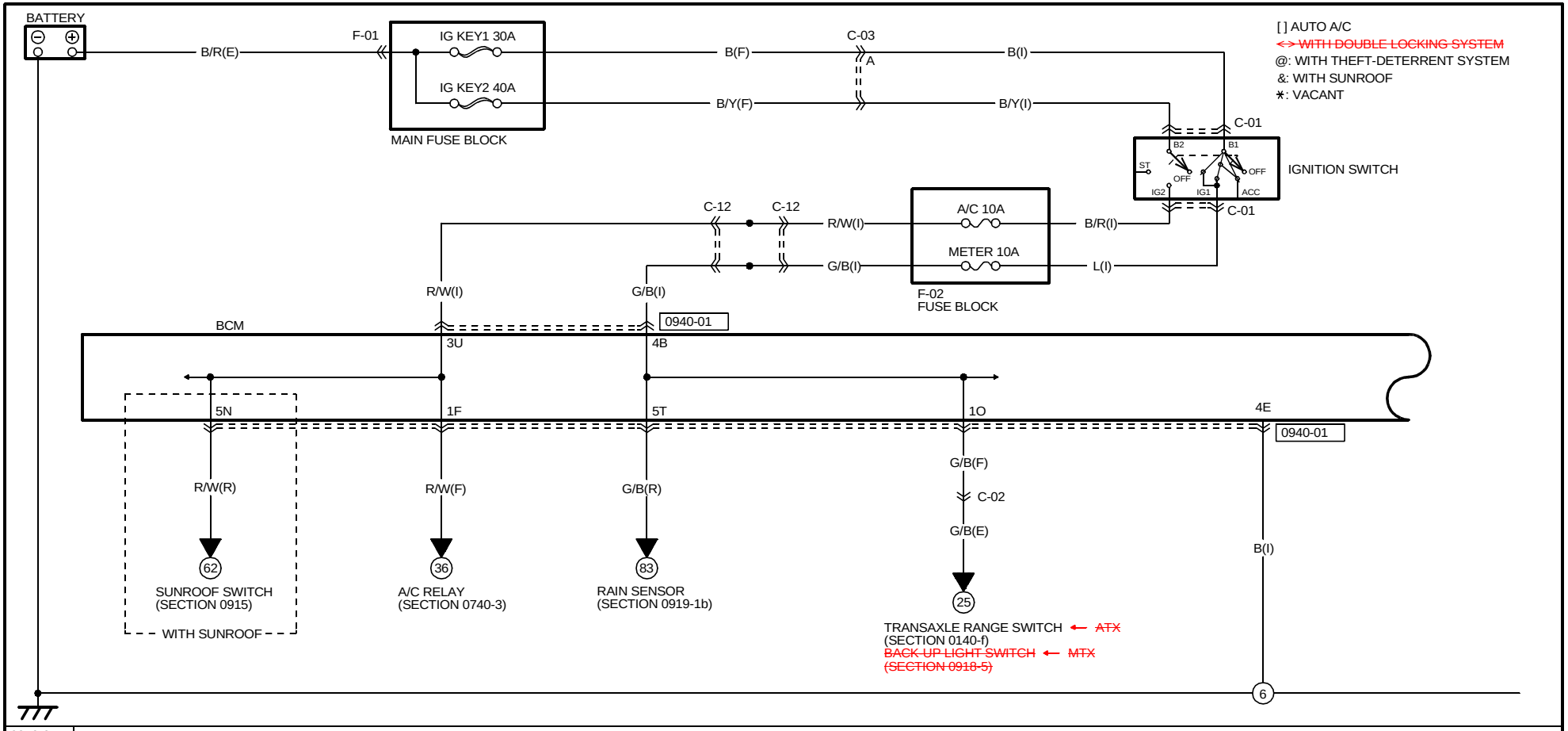

0940-01
BCM

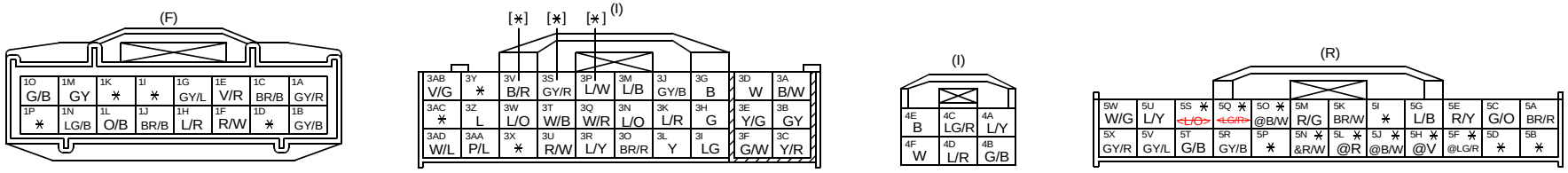

cardiagn.com

HARNESS SYMBOL : (F) (E) (R)

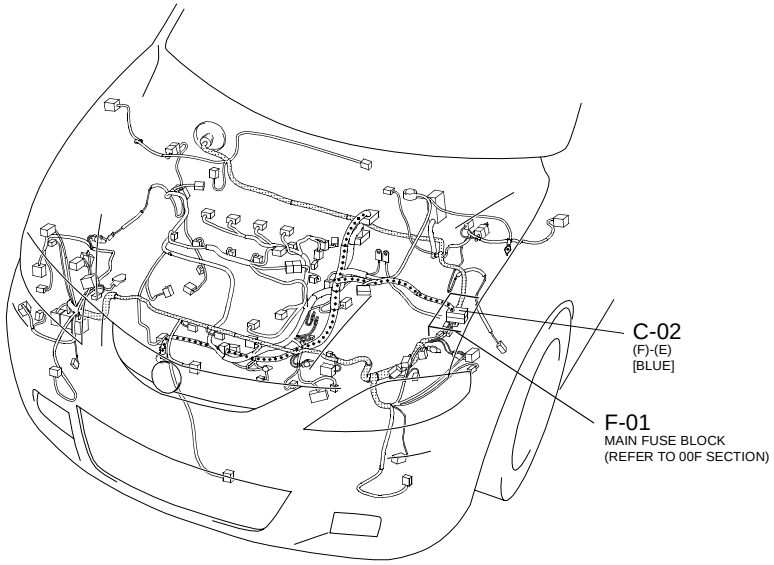

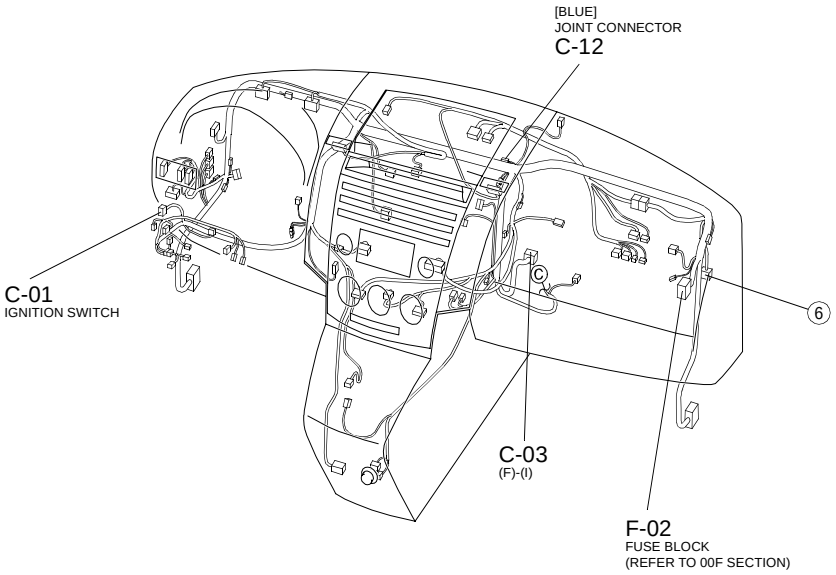

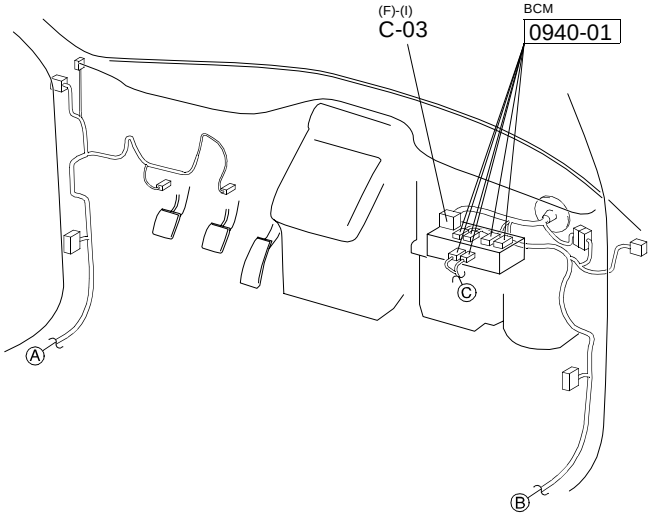

cardiagn.com

BCM (BODY CONTROL MODULE)

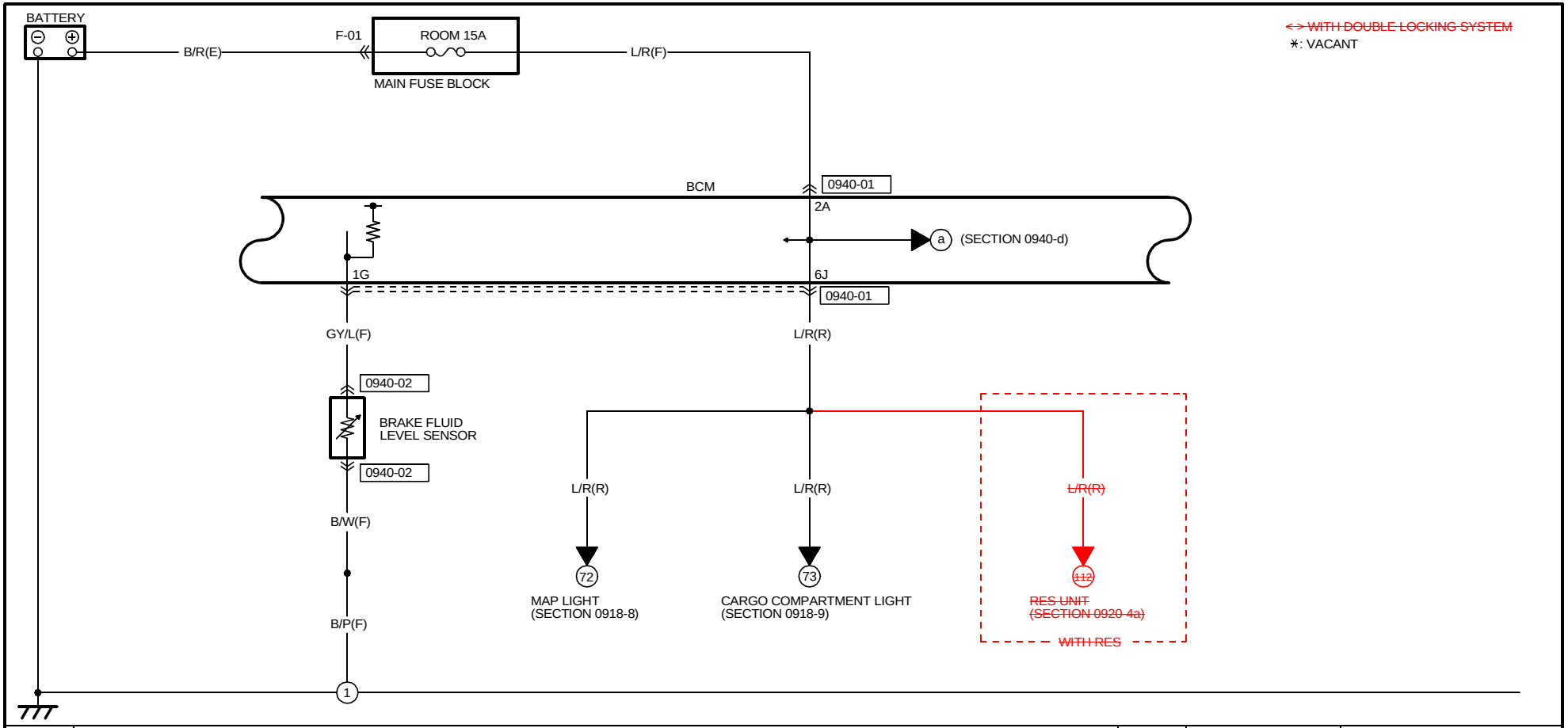

0940-01
BCM

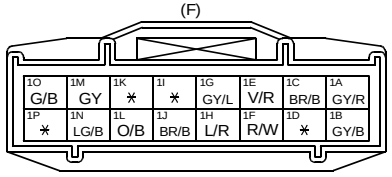

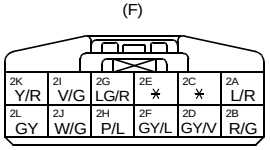

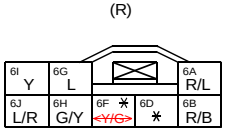

0940-02
BRAKE FLUID LEVEL SENSOR(F)

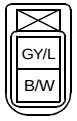

cardiagn.com

HARNESS SYMBOL : (F) (E) (R)

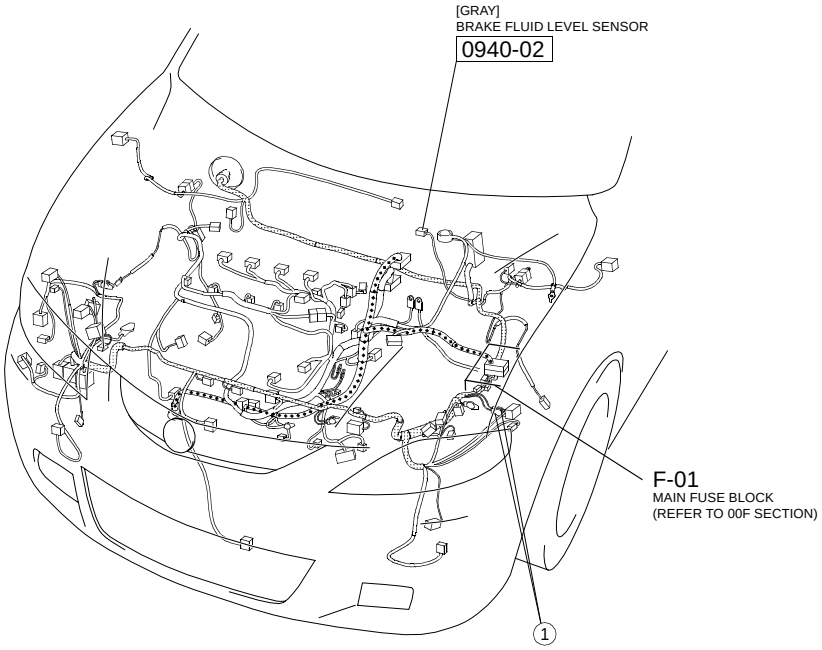

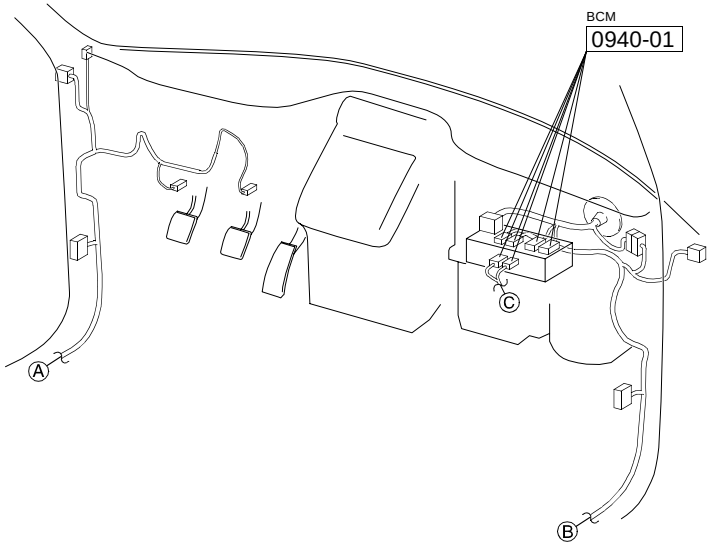

cardiagn.com

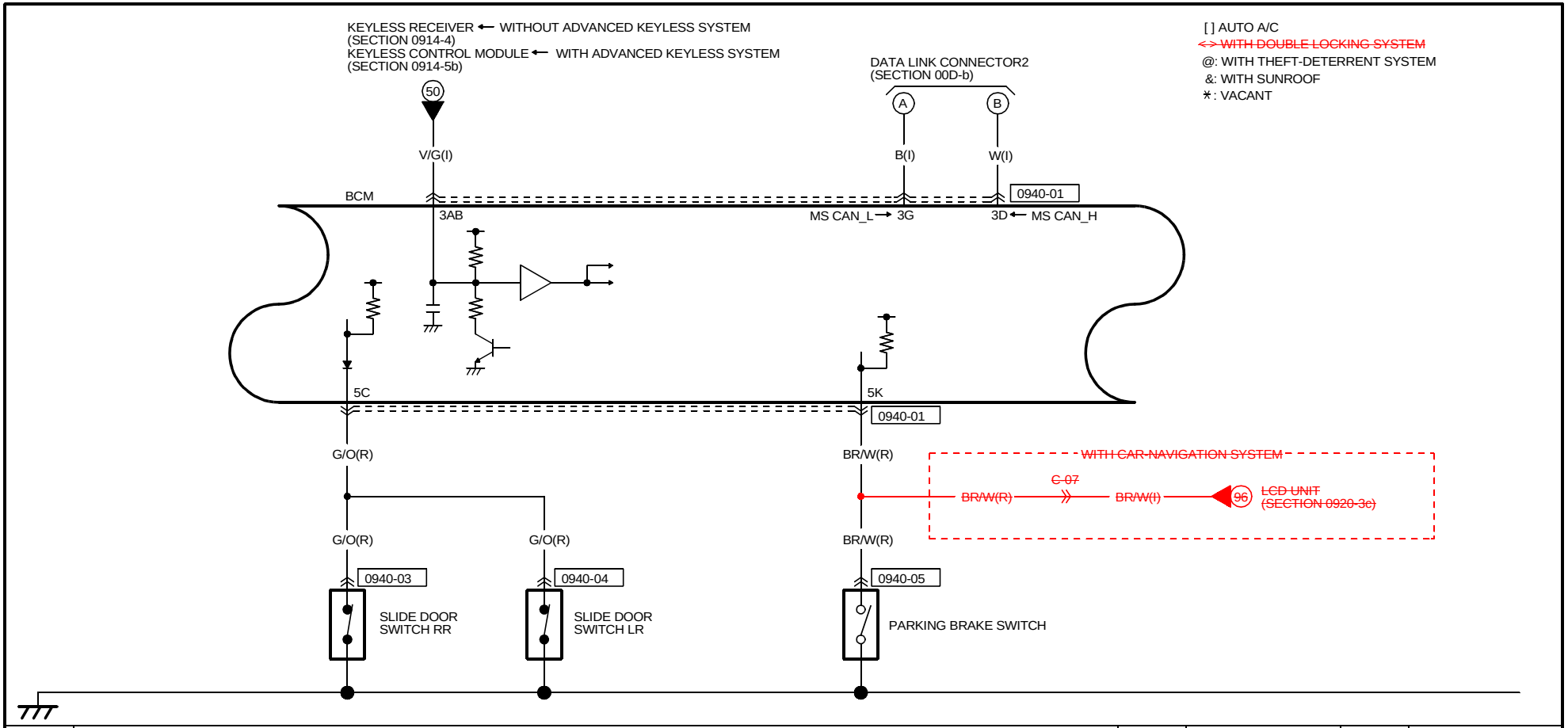

0940-01
BCM

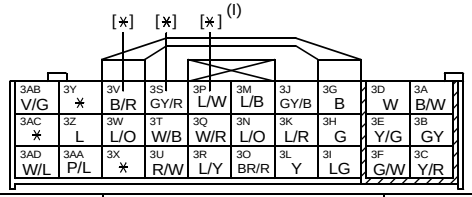

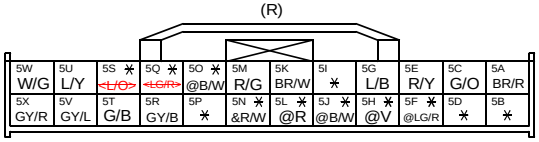

0940-03
SLIDE DOOR SWITCH RR(R)

0940-04
SLIDE DOOR SWITCH LR(R)

0940-05
PARKING BRAKE SWITCH(R)

cardiagn.com

HARNESS SYMBOL : (F) (E) (R)

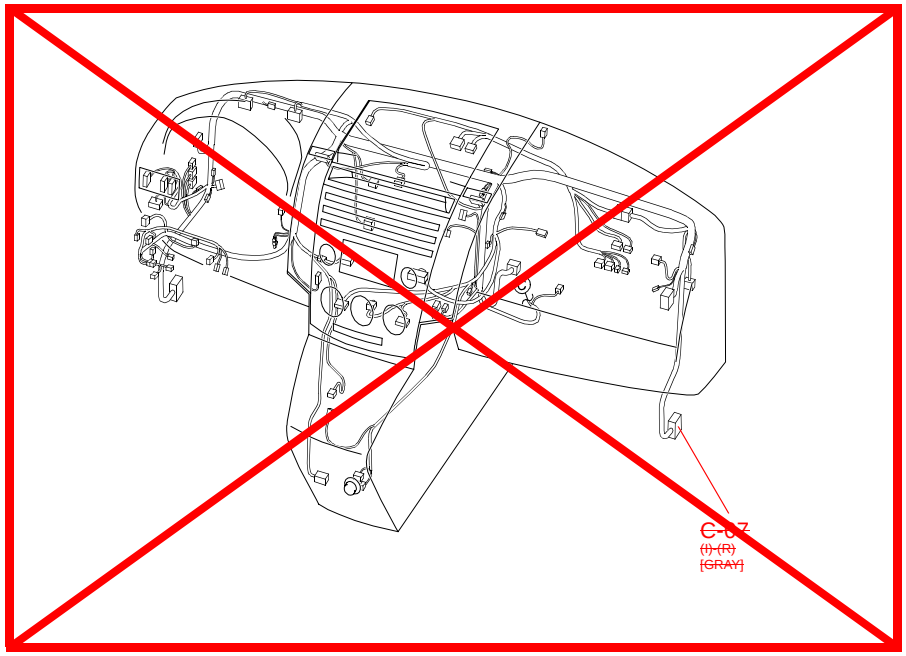

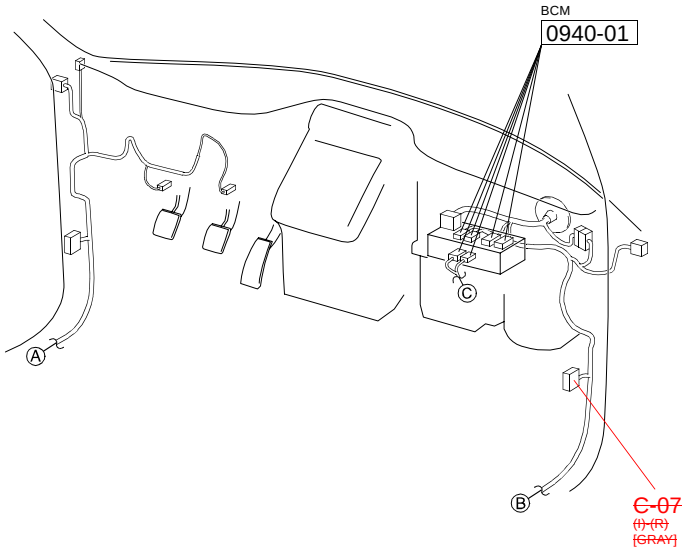

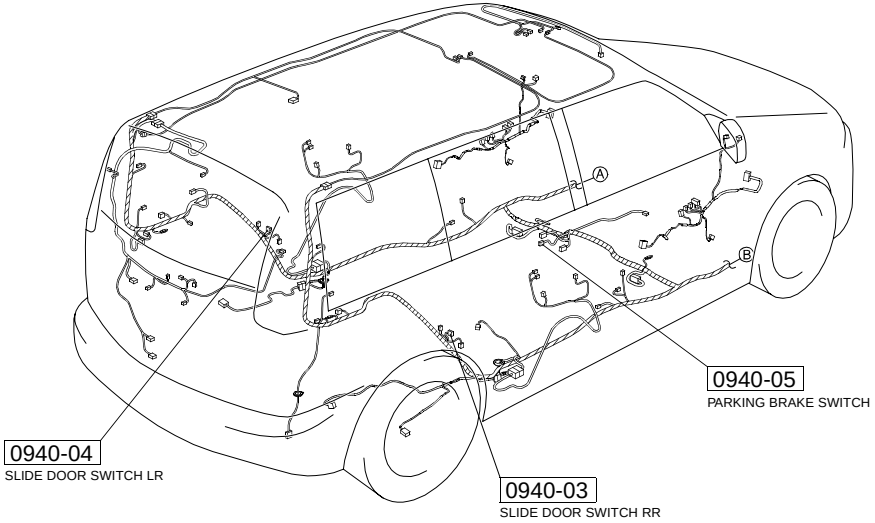

cardiagn.com

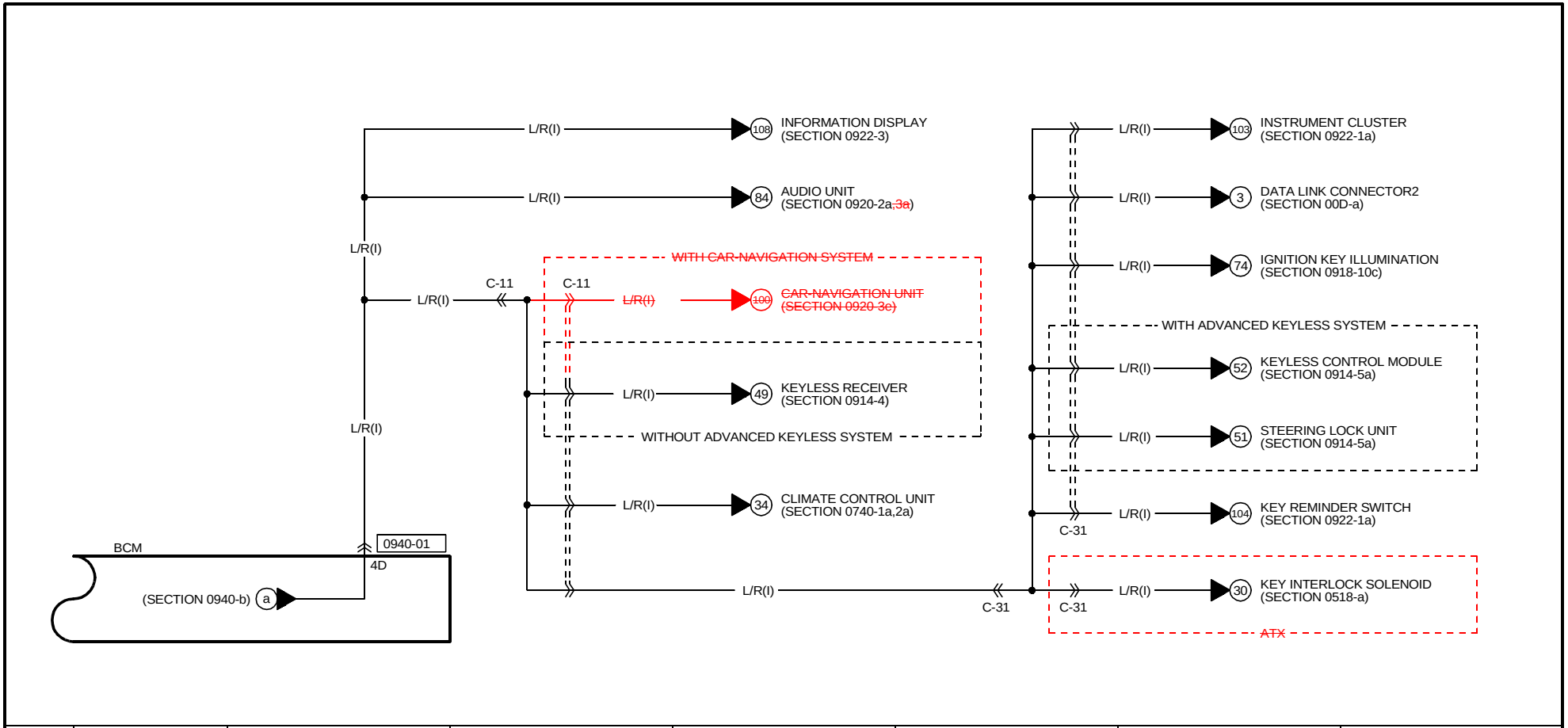

0940-01
BCM

(I)

4E B	4C LG/R	4A L/Y
4F W	4D L/R	4B G/B

cardiagn.com

HARNESS SYMBOL : (F) (E) (R)

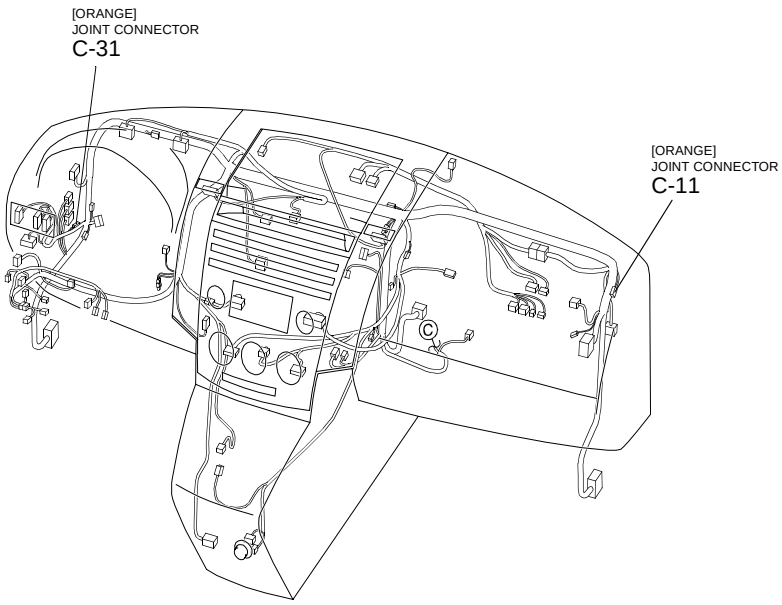

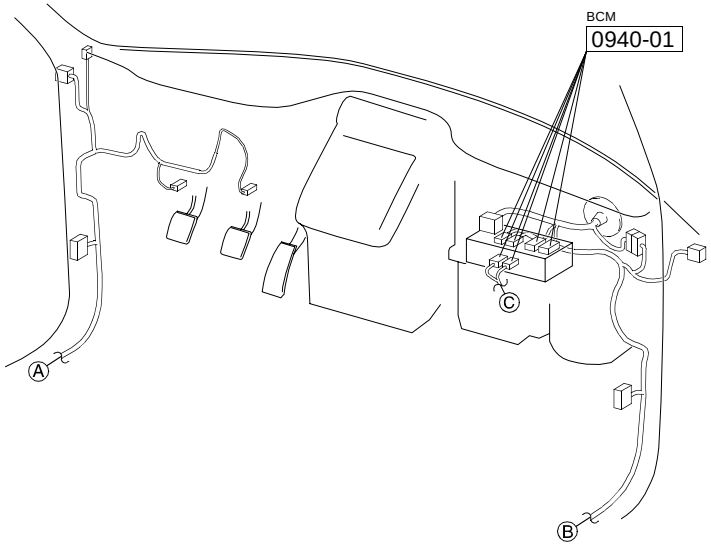

cardiagn.com